Feedback Capacity of the Gaussian Interference Channel to Within 2 Bits

Changho Suh, *Student Member, IEEE*, and David N. C. Tse, *Fellow, IEEE*

***Abstract*—We characterize the capacity region to within 2 bits/s/Hz and the symmetric capacity to within 1 bit/s/Hz for the two-user Gaussian interference channel (IC) with feedback. We develop achievable schemes and derive a new outer bound to arrive at this conclusion. One consequence of the result is that feedback provides *multiplicative* gain at high signal-to-noise ratio: the gain becomes arbitrarily large for certain channel parameters. This finding is in contrast to point-to-point and multiple-access channels where feedback provides no gain and only *bounded additive* gain respectively. The result makes use of a linear deterministic model to provide insights into the Gaussian channel. This deterministic model is a special case of the El Gamal–Costa deterministic model and as a side-generalization, we establish the exact feedback capacity region of this general class of deterministic ICs.**

***Index Terms*—Deterministic model, feedback capacity, Gaussian interference channel, side information.**

I. Introduction

SHANNON showed that feedback does not increase the capacity of memoryless point-to-point channels [1]. On the other hand, feedback can indeed increase capacity in channels with memory such as colored Gaussian noise. However, the gain is *bounded*: feedback can provide a capacity increase of at most one bit [2]–[4]. In the multiple access channel (MAC), Gaarder and Wolf [5] showed that feedback could increase capacity even when the channel is memoryless. Inspired by this result, Ozarow [6] found the feedback capacity region for the two-user Gaussian MAC. Ozarow's result reveals that feedback gain is *bounded*. The reason for the bounded gain is that in the MAC, transmitters cooperation induced by feedback can at most boost signal power via aligning signal directions. Boosting signal power provides a capacity increase of a bounded number of bits.

In the MAC, the receiver decodes the messages of *all* users. A natural question is to ask whether feedback can provide more significant gain in channels where a receiver wants to decode only the desired message in the presence of interference. To answer this question, we focus on the simple two-user Gaussian interference channel (IC) where each receiver wants to decode the message only from its corresponding transmitter. We first make progress on the symmetric capacity. Gaining insights from a deterministic model [7] and the Alamouti scheme [8], we develop a simple two-staged achievable scheme. We then derive a new outer bound to show that the proposed scheme achieves the symmetric capacity to within one bit for all values of the channel parameters.

An interesting consequence of this result is that feedback can provide *multiplicative* gain in interference channels at high signal-to-noise ratio (SNR). This can be shown from the generalized degrees-of-freedom in Fig. 1. The notion was defined in [9] as

$$d(\alpha) \triangleq \lim_{\mathsf{SNR},\mathsf{INR}\to\infty} \frac{C_{\mathsf{sym}}(\mathsf{SNR},\mathsf{INR})}{\log \mathsf{SNR}} \tag{1}$$

where $C_{\mathsf{sym}}(\mathsf{SNR},\mathsf{INR}) = \sup\{R : (R,R) \in \mathcal{C}\}$ and $\mathcal{C}$ is the capacity region. In the figure, α (x axis) indicates the ratio of INR to SNR in dB scale: $\alpha \triangleq \frac{\log \mathsf{INR}}{\log \mathsf{SNR}}$. Notice that in certain weak interference regimes ($0 \le \alpha \le \frac{2}{3}$) and in the very strong interference regime ($\alpha \ge 2$), feedback gain becomes arbitrarily large as SNR and INR go to infinity. For instance, when $\alpha = \frac{1}{2}$, the gap between the nonfeedback and the feedback capacity becomes unbounded with the increase of SNR and INR, i.e.

$$C_{\mathsf{sym}}^{\mathsf{FB}} - C_{\mathsf{sym}}^{\mathsf{NO}} \longrightarrow \frac{1}{4}\log \mathsf{SNR} \longrightarrow \infty. \tag{2}$$

Observing the ratio of the feedback to the nonfeedback capacity in the high SNR regime, one can see that feedback provides *multiplicative* gain (50% gain for $\alpha = \frac{1}{2}$): $\frac{C_{\mathsf{sym}}^{\mathsf{FB}}}{C_{\mathsf{sym}}^{\mathsf{NO}}} \to 1.5$.

Moreover, we generalize the result to characterize the feedback *capacity region* to within 2 bits per user for all values of the channel parameters. Unlike the symmetric case, we develop an infinite-staged achievable scheme that employs three techniques: (i) block Markov encoding [10], [11]; (ii) backward decoding [12]; and (iii) Han-Kobayashi message splitting [13]. This result shows an interesting contrast with the nonfeedback capacity result. In the nonfeedback case, it has been shown that the inner and outer bounds [13], [9] that guarantee a 1 bit gap to the optimality are described by five types of inequalities including the bounds for $R_1 + 2R_2$ and $2R_1 + R_2$. On the other hand, our result shows that the feedback capacity region approximated to within 2 bits requires only three types of inequalities without the $R_1 + 2R_2$ and $2R_1 + R_2$ bounds.

We also develop two interpretations to provide qualitative insights as to where feedback gain comes from. The first interpretation, which we call *resource hole interpretation*, says that the gain comes from using feedback to maximize resource utilization, thereby enabling more efficient resource sharing between

Manuscript received May 01, 2010; revised July 26, 2010; accepted January 31, 2011. Date of current version April 20, 2011. This work was supported by the Intel Corporation and by the National Science Foundation by Grant CNS-0722032. The material in this paper was presented at the IEEE International Symposium on Information Theory, Seoul, South Korea, July 2009.

The authors are with Wireless Foundations, Department of Electrical Engineering and Computer Sciences, University of California, Berkeley, CA 94704 USA (e-mail: chsuh@eecs.berkeley.edu; dtse@eecs.berkeley.edu).

Communicated by S. Vishwanath, Associate Editor for the special issue on "Interference Networks".

Color versions of one or more of the figures in this paper are available online at http://ieeexplore.ieee.org.

Digital Object Identifier 10.1109/TIT.2011.2119990

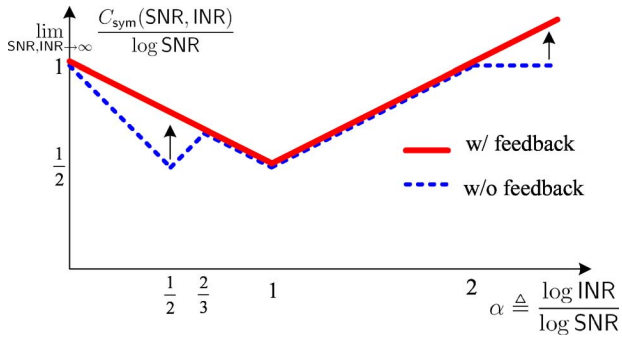

Fig. 1. Generalized degrees-of-freedom of the Gaussian IC with feedback. For certain weak interference regimes ($0 \le \alpha \le \frac{2}{3}$) and for the very strong interference regime ($\alpha \ge 2$), the gap between the nonfeedback and the feedback capacity becomes arbitrarily large as SNR and INR go to infinity. This implies that feedback can provide unbounded gain.

the interfering users. The second interpretation is that feedback enables receivers to exploit their received signals as *side information* to increase the nonfeedback capacity. With this interpretation, we make a connection between our feedback problem and other interesting problems in network information theory.

Our results make use of a linear deterministic model [7], [37] to provide insights into the Gaussian channel. This deterministic model is a special case of the El Gamal–Costa model [14]. As a side-generalization, we establish the exact feedback capacity region of this general class of deterministic ICs. From this result, one can infer an approximate feedback capacity region of two-user Gaussian MIMO ICs, as Teletar and Tse [15] did in the nonfeedback case.

Interference channels with feedback have received previous attention [16]–[20]. Kramer [16], [17] developed a feedback strategy in the Gaussian IC; Kramer-Gastpar [18] and Tandon-Ulukus [19] derived outer bounds. However, the gap between the inner and outer bounds becomes arbitrarily large with the increase of SNR and INR.[1] Jiang–Xin–Garg [20] found an achievable region in the discrete memoryless IC with feedback, based on block Markov encoding [10] and binning. However, their scheme involves three auxiliary random variables and therefore requires further optimization. Also no outer bounds are provided. We propose explicit achievable schemes and derive a new tighter outer bound to characterize the capacity region to within 2 bits and the symmetric capacity to within 1 bit universally. Subsequent to our work, Prabhakaran and Viswanath [21] have found an interesting connection between our feedback problem and the conferencing encoder problem. Making such a connection, they have independently characterized the sum feedback capacity to within 19 bits/s/Hz.

II. Model

Fig. 2 describes the two-user Gaussian IC with feedback where each transmitter gets delayed channel-output feedback only from its own receiver. Without loss of generality, we

[1]Although this strategy can be arbitrarily far from optimality, a careful analysis reveals that the Kramer scheme can also provide multiplicative feedback gain. See Fig. 13 for this.

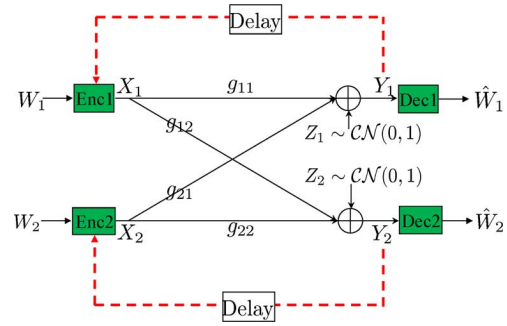

Fig. 2. Gaussian interference channel (IC) with feedback.

normalize signal power and noise power to 1, i.e., $P_k = 1$, $Z_k \sim \mathcal{CN}(0,1), \forall k = 1,2$. Hence, the SNR and the interference-to-noise ratio (INR) can be defined to capture the channel gains

$$\begin{aligned} \mathsf{SNR}_1 &\triangleq |g_{11}|^2,\ \mathsf{SNR}_2 \triangleq |g_{22}|^2 \\ \mathsf{INR}_{12} &\triangleq |g_{12}|^2,\ \mathsf{INR}_{21} \triangleq |g_{21}|^2. \end{aligned} \tag{3}$$

There are two independent and uniformly distributed messages, $W_k \in \{1,2,\ldots,m_k\}, \forall k = 1,2$. Due to the delayed feedback, the encoded signal X_{ki} of user k at time i is a function of its own message and past output sequences

$$X_{ki} = f_k^i\left(W_k, Y_{k1}, \ldots, Y_{k(i-1)}\right) = f_k^i\left(W_k, Y_k^{i-1}\right) \tag{4}$$

where we use shorthand notation Y_k^{i-1} to indicate the sequence up to $i-1$. A rate pair (R_1, R_2) is achievable if there exists a family of codebook pairs with codewords (satisfying power constraints) and decoding functions such that the average decoding error probabilities go to zero as code length N goes to infinity. The capacity region $\mathcal{C}$ is the closure of the set of the achievable rate pairs.

III. Symmetric Capacity to Within One Bit

We start with the symmetric channel setting where $|g_{11}| = |g_{22}| = |g_d|$ and $|g_{12}| = |g_{21}| = |g_c|$

$$\mathsf{SNR} \triangleq \mathsf{SNR}_1 = \mathsf{SNR}_2,\ \mathsf{INR} \triangleq \mathsf{INR}_{12} = \mathsf{INR}_{21}. \tag{5}$$

Not only is this symmetric case simple, it also provides the key ingredients to both the achievable scheme and outer bound needed for the characterization of the capacity region. Furthermore, this case provides enough qualitative insights as to where feedback gain comes from. Hence, we first focus on the symmetric channel.

Theorem 1: We can achieve a symmetric rate of

$$R_{\mathsf{sym}} = \max\left\{\frac{1}{2}\log(1+\mathsf{INR}),\ \frac{1}{2}\log\left(\frac{(1+\mathsf{SNR}+\mathsf{INR})^2 - \frac{\mathsf{SNR}}{1+\mathsf{INR}}}{1+2\mathsf{INR}}\right)\right\}. \tag{6}$$

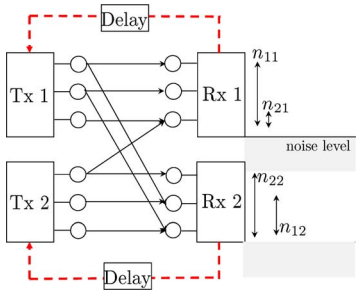

Fig. 3. Deterministic IC with feedback.

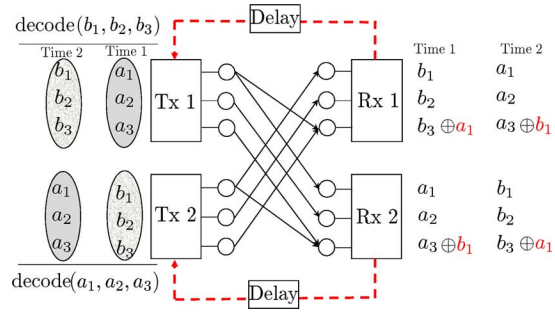

Fig. 4. Achievable scheme for the deterministic IC: strong interference regime $\alpha := \frac{m}{n} = 3$.

The symmetric capacity is upper-bounded by

$$\bar{C}_{\text{sym}} = \frac{1}{2} \sup_{0 \le \rho \le 1} \left[\log\left(1 + \frac{(1-\rho^2)\text{SNR}}{1 + (1-\rho^2)\text{INR}}\right) + \log(1 + \text{SNR} + \text{INR} + 2\rho\sqrt{\text{SNR} \cdot \text{INR}}) \right]. \quad (7)$$

For all channel parameters of SNR and INR

$$\bar{C}_{\text{sym}} - R_{\text{sym}} \le 1. \quad (8)$$

Proof: See Sections III-D, III-E, and III-F. ■

A. Deterministic Model

As a stepping stone towards the Gaussian IC, we use an intermediate model: the linear deterministic model [7], illustrated in Fig. 3. This model is useful in the nonfeedback Gaussian IC: it was shown in [22] that the deterministic IC can approximate the Gaussian IC to within a bounded number of bits irrespective of the channel parameter values. Our approach is to first develop insights from this model and then translate them to the Gaussian channel.

The connection with the Gaussian channel is as follows. The deterministic IC is characterized by four values: n_{11}, n_{12}, n_{21} and n_{22} where n_{ij} indicates the number of signal bit levels (or resource levels) from transmitter i to receiver j. These values correspond to the channel gains in dB scale, i.e., $\forall i \neq j$

$$n_{ii} = \lfloor \log \text{SNR}_i \rfloor, \; n_{ij} = \lfloor \log \text{INR}_{ij} \rfloor. \quad (9)$$

In the symmetric channel, $n \triangleq n_{11} = n_{22}$ and $m \triangleq n_{12} = n_{21}$. Upper signal levels correspond to more significant bits and lower signal levels correspond to less significant bits of the received signal. A signal bit level observed by both the receivers above the noise level is broadcasted. If multiple signal levels arrive at the same signal level at a receiver, we assume a modulo-2-addition.

B. Achievable Scheme for the Deterministic IC

Strong Interference Regime $(m \ge n)$: We explain the scheme through the simple example of $\alpha := \frac{m}{n} = 3$, illustrated in Fig. 4. Note that each receiver can see only one signal level from its corresponding transmitter. Therefore, in the nonfeedback case, each transmitter can send only 1 bit through the top signal level. However, feedback can create a better alternative path, i.e., [transmitter1 $\rightarrow$ *receiver*2 $\rightarrow$ *feedback* $\rightarrow$ transmitter2 $\rightarrow$ *receiver*1]. This alternative path enables an increase over the nonfeedback rate.

The feedback scheme consists of two stages. In the first stage, transmitters 1 and 2 send independent binary symbols (a_1, a_2, a_3) and (b_1, b_2, b_3), respectively. Each receiver defers decoding to the second stage. In the second stage, using feedback, each transmitter decodes information of the other user: transmitters 1 and 2 decode (b_1, b_2, b_3) and (a_1, a_2, a_3), respectively. Each transmitter then sends the other user's information. Each receiver gathers the received bits sent during the two stages: the six linearly independent equations containing the six unknown symbols. As a result, each receiver can solve the linear equations to decode its desired bits. Notice that the second stage was used for refining all the bits sent previously, without sending additional information. Therefore, the symmetric rate is $\frac{3}{2}$ in this example. Notice the 50% improvement from the nonfeedback rate of 1. We can easily extend the scheme to arbitrary (n, m). In the first stage, each transmitter sends m bits using all the signal levels. Using two stages, these m bits can be decoded with the help of feedback. Thus, we can achieve

$$R_{\text{sym}} = \frac{m}{2}. \quad (10)$$

Remark 1: The gain in the strong interference regime comes from the fact that feedback provides a better alternative path through the two cross links. The cross links relay the other user's information through feedback. We can also explain this gain using a resource hole interpretation. Notice that in the nonfeedback case, each transmitter can send only 1 bit through the top level and therefore there is a resource hole (in the second level) at each receiver. However, with feedback, all of the resource levels at the two receivers can be filled up. Feedback maximizes resource utilization by providing a better alternative path. This concept coincides with correlation routing in [16].

On the other hand, in the weak interference regime, there is no better alternative path, since the cross links are weaker than the direct links. Nevertheless, it turns out that feedback gain can also be obtained in this regime.

Weak Interference Regime $(m \le n)$: Let us start by examining the scheme in the nonfeedback case. Unlike the strong interference regime, only part of information is visible to the other receiver in the weak interference regime. Hence, information can be split into two parts [13]: common m bits (visible

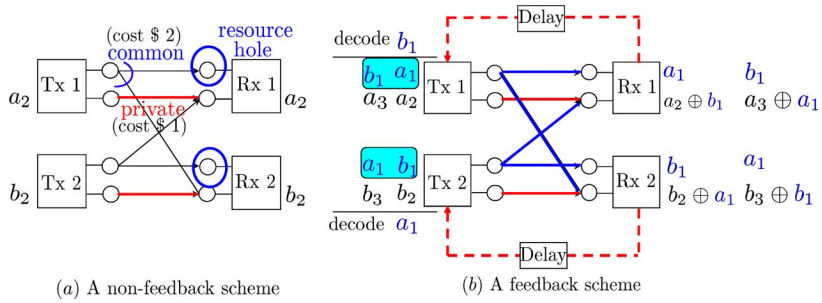

Fig. 5. Achievable schemes for the weak interference regime, e.g., $\alpha = \frac{m}{n} = \frac{1}{2}$. (a) A nonfeedback scheme. (b) A feedback scheme.

to the other receiver) and private $(n-m)$ bits (invisible to the other receiver). Notice that using common levels causes interference to the other receiver. Sending 1 bit through a common level consumes a total of 2 levels at the two receivers (say $2), while using a private level costs only $1. Because of this, a reasonable achievable scheme is to follow the two steps sequentially: (i) sending all of the cheap $(n-m)$ private bits on the lower levels; (ii) sending some number of common bits on the upper levels. The number of common bits is decided depending on m and n.

Consider the simple example of $\alpha = \frac{m}{n} = \frac{1}{2}$, illustrated in Fig. 5(a). First transmitters 1 and 2 use the cheap private signal levels, respectively. Once the bottom levels are used, however using the top levels is precluded due to a conflict with the private bits already sent, thus each transmitter can send only one bit.

Observe the two resource holes on the top levels at the two receivers. We find that feedback helps fill up all of these resource holes to improve performance. The scheme uses two stages. As for the private levels, the same procedure is applied as that in the nonfeedback case. How to use the common levels is key to the scheme. In the first stage, transmitters 1 and 2 send private bits a_2 and b_2 on the bottom levels, respectively. Now transmitter 1 squeezes one more bit a_1 on its top level. While a_1 is received cleanly at receiver 1, it causes interference at receiver 2. Feedback can however resolve this conflict. In the second stage, with feedback transmitter 2 can decode the common bit a_1 of the other user. As for the bottom levels, transmitters 1 and 2 send new private bits a_3 and b_3, respectively. The idea now is that transmitter 2 sends the other user's common bit a_1 on its top level. This transmission allows receiver 2 to refine the corrupted bit b_2 from $b_2 \oplus a_1$ without causing interference to receiver 1, since receiver 1 already had the side information of a_1 from the previous broadcasting. We paid $2 for the earlier transmission of a_1, but now we can get a *rebate* of $1. Similarly, with feedback, transmitter 2 can squeeze one more bit b_1 on its top level without causing interference. Therefore, we can achieve the symmetric rate of $\frac{3}{2}$ in this example, i.e., a 50% improvement from the nonfeedback rate of 1.

This scheme can be easily generalized to arbitrary (n, m). In the first stage, each transmitter sends m bits on the upper levels and $(n-m)$ bits on the lower levels. In the second stage, each transmitter forwards the m bits of the other user on the upper levels and sends new $(n-m)$ private bits on the lower levels. Then, each receiver can decode all of the n bits sent in the first stage and new $(n-m)$ private bits sent in the second stage. Therefore, we can achieve

$$R_{\text{sym}} = \frac{n + (n-m)}{2} = n - \frac{m}{2}. \tag{11}$$

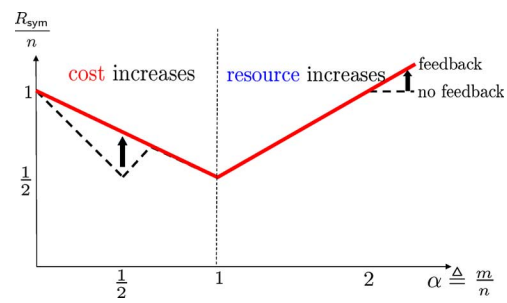

Fig. 6. Symmetric feedback rate (10), (11) for the deterministic IC. Feedback maximizes resource utilization while it cannot reduce transmission costs. The "V" curve is obtained when all of the resource levels are fully packed with feedback. This shows the optimality of the feedback scheme.

Remark 2 (Resource Hole Interpretation): Observe that all the resource levels are fully packed after applying the feedback scheme. Thus, feedback maximizes resource utilization to improve the performance significantly. We will discuss this interpretation in more details in Section VI-B.

We also develop another interpretation as to the role of feedback, which leads us to make an intimate connection to other interesting problems in network information theory. We will discuss this connection later in Section VI-C.

C. Optimality of the Achievable Scheme for the Deterministic IC

Now a natural question arises: is the scheme optimal? In this section, using the resource hole interpretation, we provide an intuitive explanation of the optimality. Later in Section V, we will provide a rigorous proof.

From W to V Curve: Fig. 6 shows (i) the symmetric feedback rate (10), (11) of the achievable scheme (representing the "V" curve); (ii) the nonfeedback capacity [22] (representing the "W" curve). Using the resource hole interpretation, we will provide intuition as to how we can go from the W curve to the V curve with feedback.

Observe that the total number of resource levels and transmission cost depend on (n, m). Specifically, suppose that the two senders employ the same transmission strategy to achieve the

symmetric rate: using x private and y common levels. We then get

$$\begin{aligned} &\# \text{ of resource levels at each receiver} = \max(n, m) \\ &\text{transmission cost} = 1 \times x + 2 \times y. \end{aligned} \tag{12}$$

Here notice that using a private level costs 1 level, while using a common level costs 2 levels. Now observe that for fixed n, as $\alpha = \frac{m}{n}$ grows: for $0 \le \alpha \le 1$, transmission cost increases; for $\alpha \ge 1$, the number of resource levels increases. Since all the resource levels are fully utilized with feedback, this observation implies that with feedback the total number of transmission bits must decrease when $0 \le \alpha \le 1$ (inversely proportional to transmission cost) and must increase when $\alpha \ge 1$ (proportional to the number of resource levels). This is reflected in the V curve. In contrast, in the nonfeedback case, for some range of α, resource levels are not fully utilized, as shown in the $\alpha = \frac{1}{2}$ example of Fig. 5(a). This is reflected in the W curve.

Why We Cannot Go Beyond the V Curve: While feedback maximizes resource utilization to fill up all of the resource holes, *it cannot reduce transmission costs*. To see this, consider the example in Fig. 5(b). Observe that even with feedback, a common bit still has to consume two levels at the two receivers. For example, the common bit a_1 needs to occupy the top level at receiver 1 in time 1; and the top level at receiver 2 in time 2. In time 1, while a_1 is received cleanly at receiver 1, it interferes with the private bit b_2. In order to refine b_2, receiver 2 needs to get a_1 cleanly and therefore needs to reserve one resource level for a_1. Thus, in order not to interfere with the private bit b_1, the common bit a_1 needs to consume a total of the two resource levels at the two receivers. As mentioned earlier, assuming that transmission cost is not reduced, a total number of transmission bits is reflected in the V curve. As a result, we cannot go beyond the "V" curve with feedback, showing the optimality of the achievable scheme. Later in Section V, we will prove this rigorously.

Remark 3 (Reminiscent of Shannon's Comment in [23]): The fact that *feedback cannot reduce transmission costs* reminds us of Shannon's closing comment in [23]: *"We may have knowledge of the past and cannot control it; we may control the future but have no knowledge of it."* This statement implies that feedback cannot control the past although it enables us to know the past; so this coincides with our finding that feedback cannot reduce transmission costs, as the costs already occurred in the past.

D. An Achievable Scheme for the Gaussian IC

Let us go back to the Gaussian channel. We will translate the deterministic IC scheme to the Gaussian IC. Let us first consider the strong interference regime.

Strong Interference Regime ($\mathsf{INR} \ge \mathsf{SNR}$): The structure of the transmitted signals in Fig. 4 shed some light on a good scheme for the Gaussian channel. Observe that in the second stage, each transmitter sends the other user's information sent in the first stage. This reminds us of the *Alamouti scheme* [8]. The beauty of the Alamouti scheme is that received signals can be designed to be orthogonal during two time slots, although the signals in the first time slot are sent without any coding. This was exploited and pointed out in distributed space-time codes [24]. With the Alamouti scheme, transmitters are able to encode their messages so that received signals are orthogonal. Orthogonality between the two different signals guarantees complete removal of the interfering signal.

In accordance with the deterministic IC example, the scheme uses two stages (or blocks). In the first stage, transmitters 1 and 2 send codewords X_1^N and X_2^N with rates R_1 and R_2, respectively. In the second stage, using feedback, transmitters 1 and 2 decode X_2^N and X_1^N, respectively. This can be decoded if

$$R_1, R_2 \le \frac{1}{2}\log(1 + \mathsf{INR}) \text{ bits/s/Hz}. \tag{13}$$

We are now ready to apply the Alamouti scheme. Transmitters 1 and 2 send X_2^{N*} and $-X_1^{N*}$, respectively. Receiver 1 can then gather the two received signals: for $1 \le i \le N$

$$\begin{bmatrix} Y_{1i}^{(1)} \\ Y_{1i}^{(2)*} \end{bmatrix} = \begin{bmatrix} g_d & g_c \\ -g_c^* & g_d^* \end{bmatrix} \begin{bmatrix} X_{1i} \\ X_{2i} \end{bmatrix} + \begin{bmatrix} Z_{1i}^{(1)} \\ Z_{1i}^{(2)*} \end{bmatrix}. \tag{14}$$

To extract X_{1i}, it multiplies the row vector orthogonal to the vector associated with X_{2i} and therefore we get:

$$\begin{aligned} &\begin{bmatrix} g_d^* & -g_c \end{bmatrix} \begin{bmatrix} Y_{1i}^{(1)} \\ Y_{1i}^{(2)*} \end{bmatrix} \\ &\qquad = (|g_d|^2 + |g_c|^2)X_{1i} + g_d^* Z_{2i}^{(1)} - g_c Z_{1i}^{(2)*}. \end{aligned} \tag{15}$$

The codeword X_1^N can be decoded if

$$R_1 \le \frac{1}{2}\log(1 + \mathsf{SNR} + \mathsf{INR}) \text{ bits/s/Hz}. \tag{16}$$

Similar operations are done at receiver 2. Since (16) is implied by (13), we get the desired result: the left term in (6).

Weak Interference Regime ($\mathsf{INR} \le \mathsf{SNR}$): Unlike the strong interference regime, in the weak interference regime, there are two types of information: common and private information. A natural idea is to apply the Alamouti scheme only for common information. It was shown in [25] that this scheme can approximate the symmetric capacity to within ≈1.7 bits/s/Hz. However, the scheme can be improved to reduce the gap further. Unlike the deterministic IC, in the Gaussian IC, private signals have some effects, i.e., these private signals cannot be completely ignored. Notice that the scheme includes *decode-and-forward* operation at the transmitters after receiving the feedback. And so when each transmitter decodes the other user's common message while treating the other user's private signals as noise, private signals can incur performance loss.

This can be avoided by instead performing *amplify-and-forward*: with feedback, the transmitters get the interference plus noise and then forward it subject to the power constraints. This transmission allows each receiver to refine its corrupted signal sent in the previous time, without causing significant interference.[2] Importantly, notice that this scheme does not require message-splitting. Even without splitting messages, we can refine the corrupted signals (see Appendix A to understand this better). Therefore, there is no loss due to private signals.

Specifically, the scheme uses two stages. In the first stage, each transmitter k sends codeword X_k^N with rate R_k. In the

[2]In Appendix A, we provide intuition behind this scheme.

second stage, with feedback transmitter 1 gets the interference plus noise:

$$S_2^N = g_c X_2^N + Z_1^{(1),N}. \tag{17}$$

Now the complex conjugate technique based on the Alamouti scheme is applied to make X_1^N and S_2^N well separable. Transmitters 1 and 2 send $\frac{S_2^{N*}}{\sqrt{1+\mathsf{INR}}}$ and $-\frac{S_1^{N*}}{\sqrt{1+\mathsf{INR}}}$, respectively, where $\sqrt{1+\mathsf{INR}}$ is a normalization factor to meet the power constraint. Under Gaussian input distribution, we can compute the rate under MMSE demodulation: $\frac{1}{2}I(X_{1i};Y_{1i}^{(1)},Y_{2i}^{(2)})$. Straightforward calculations give the desired result: the right-hand-side term in (6). See Appendix A for detailed computations.

Remark 4: As mentioned earlier, unlike the decode-and-forward scheme, the amplify-and-forward scheme does not require message-splitting, thereby removing the effect of private signals. This improves the performance to reduce the gap further.

E. An Outer Bound

The symmetric rate upper bound is implied by the outer bound for the capacity region; we defer the proof to Theorem 3 in Section IV-B.

F. One-Bit Gap to the Symmetric Capacity

Using the symmetric rate of (6) and the outer bound of (7), we get the equation at the bottom of the page. Step (a) follows from choosing the trivial maximum value of the outer bound (7) and choosing a minimum value (the second term) of the lower bound (6). Note that the first and second terms in (7) are maximized when $\rho = 0$ and $\rho = 1$, respectively. Step (b) follows from $1+\mathsf{SNR}+\mathsf{INR}+2\sqrt{\mathsf{SNR}\cdot\mathsf{INR}} \le 2(1+\mathsf{SNR}+\mathsf{INR})$; and (c) follows from $(1+\mathsf{SNR}+\mathsf{INR})^2 \ge 2\mathsf{SNR}$ and $\frac{\mathsf{SNR}}{(1+\mathsf{SNR}+\mathsf{INR})^2} \le 1$.

Fig. 8 shows a numerical result for the gap between the inner and outer bounds. Notice that the gap is upper-bounded by exactly one bit. The worst-case gap occurs when $\mathsf{SNR} \approx \mathsf{INR}$ and these values go to infinity. Also note that in the strong interference regime, the gap approaches 0 with the increase of SNR and INR, while in the weak interference regime, the gap does not vanish. For example, when $\alpha = \frac{1}{2}$, the gap is around 0.5 bits.

Remark 5 (Why does a 1-bit gap occur?): Observe in Figs. 7 and 15 that the transmitted signals of the two senders are *uncorrelated* in our scheme. The scheme completely loses power gain (also called beamforming gain). On the other hand, when deriving the outer bound of (7), we allow for arbitrary correlation between the transmitters. Thus, the 1-bit gap is based on *the outer bound*. In any scheme, the correlation is in-between and therefore one can expect that the actual gap to the capacity is less than 1 bit.

Beamforming gain is important only when SNR and INR are quite close, i.e., $\alpha \approx 1$. This is because when $\alpha = 1$, the interference channel is equivalent to the multiple access channel where the Ozarow scheme [6] and the Kramer scheme [16] (that

$$\begin{aligned}
&2(\bar{C}_{\mathsf{sym}} - R_{\mathsf{sym}}) \\
&\overset{(a)}{\le} \log\left(1+\frac{\mathsf{SNR}}{1+\mathsf{INR}}\right) \\
&\quad + \log(1+\mathsf{SNR}+\mathsf{INR}+2\sqrt{\mathsf{SNR}\cdot\mathsf{INR}}) \\
&\quad - \log\left(\frac{(1+\mathsf{SNR}+\mathsf{INR})^2 - \frac{\mathsf{SNR}}{1+\mathsf{INR}}}{1+2\mathsf{INR}}\right) \\
&= \log\left(\frac{1+\mathsf{SNR}+\mathsf{INR}(1+\mathsf{SNR}+\mathsf{INR}+2\sqrt{\mathsf{SNR}\cdot\mathsf{INR}})}{1+\mathsf{INR}}\right) \\
&\quad + \log\left(\frac{(1+2\mathsf{INR})(1+\mathsf{INR})}{(1+\mathsf{SNR}+\mathsf{INR})^2(1+\mathsf{INR})-\mathsf{SNR}}\right) \\
&= \log\left(\frac{1+\mathsf{SNR}+\mathsf{INR}+2\sqrt{\mathsf{SNR}\cdot\mathsf{INR}}}{1+\mathsf{SNR}+\mathsf{INR}}\right. \\
&\quad \left.\cdot\frac{1+2\mathsf{INR}}{1+\mathsf{INR}-\frac{\mathsf{SNR}}{(1+\mathsf{SNR}+\mathsf{INR})^2}}\right) \\
&\overset{(b)}{\le} \log\left(2\cdot\frac{2\left(1+\mathsf{INR}-\frac{\mathsf{SNR}}{(1+\mathsf{SNR}+\mathsf{INR})^2}\right)-1+\frac{2\mathsf{SNR}}{(1+\mathsf{SNR}+\mathsf{INR})^2}}{1+\mathsf{INR}-\frac{\mathsf{SNR}}{(1+\mathsf{SNR}+\mathsf{INR})^2}}\right) \\
&= \log\left(2\cdot\left\{2-\left(\frac{1-\frac{2\mathsf{SNR}}{(1+\mathsf{SNR}+\mathsf{INR})^2}}{1+\mathsf{INR}-\frac{\mathsf{SNR}}{(1+\mathsf{SNR}+\mathsf{INR})^2}}\right)\right\}\right) \\
&\overset{(c)}{\le} \log 4 = 2.
\end{aligned}$$

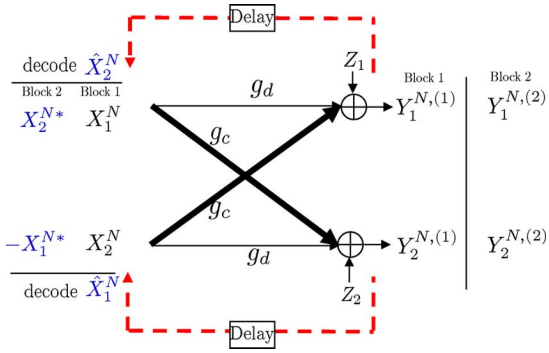

Fig. 7. Alamouti-based achievable scheme for the Gaussian IC: strong interference regime.

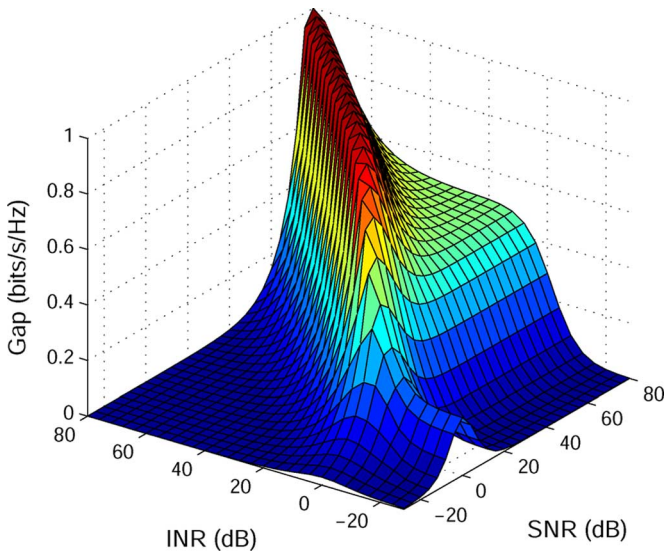

Fig. 8. Gap between our inner and upper bounds. The gap is upper-bounded by exactly one bit. The worst-case gap occurs when $\mathsf{SNR} \approx \mathsf{INR}$ and these values go to infinity. In the strong interference regime, the gap vanishes with the increase of SNR and INR, while in the weak interference regime, the gap does not, e.g., the gap is around 0.5 bits for $\alpha = \frac{1}{2}$.

capture beamforming gain) are optimal. In fact, the capacity theorem in [17] shows that the Kramer scheme is optimal for one specific case of $\mathsf{INR} = \mathsf{SNR} - \sqrt{2 \cdot \mathsf{SNR}}$, although it is arbitrarily far from optimality for the other cases. This observation implies that our proposed scheme can be improved further.

IV. Capacity Region to Within 2 Bits

A. Achievable Rate Region

We have developed an achievable scheme meant for the symmetric rate and provided a resource hole interpretation. To achieve the capacity region, we find that while this interpretation can also be useful, the two-staged scheme is not enough. A new achievable scheme needs to be developed for the region characterization.

To see this, let us consider a deterministic IC example in Fig. 9 where an infinite number of stages need to be employed to achieve a corner point of (2,1) with feedback. Observe that to guarantee $R_1 = 2$, transmitter 1 needs to send 2 bits every

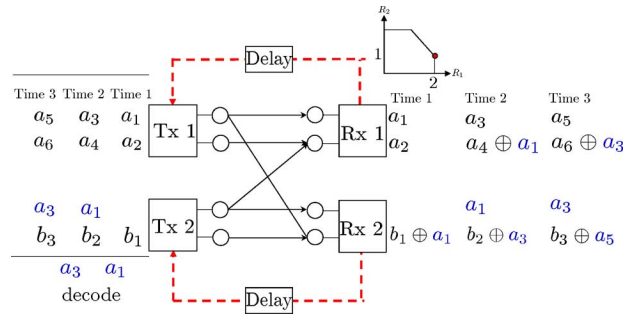

Fig. 9. Deterministic IC example where an infinite number of stages need to be employed to achieve the rate pair of (2,1) with feedback. This example motivates us to use (1) block Markov encoding; and (2) Han-Kobayashi message splitting.

time slot. Once transmitter 1 sends (a_1, a_2), transmitter 2 cannot use its top level since the transmission causes interference to receiver 1. It can use only the bottom level to send information. This transmission however suffers from interference: receiver 2 gets the interfered signal $b_1 \oplus a_1$. We will show that this corrupted bit can be refined with feedback. In time 2, transmitter 2 can decode a_1 with feedback. In an effort to achieve the rate pair of (2,1), transmitter 1 sends (a_3, a_4) and transmitter 2 sends b_2 on the bottom level. Now apply the same idea used in the symmetric case: transmitter 2 sends the other user's information a_1 on the top level. This transmission allows receiver 2 to refine the corrupted signal b_1 without causing interference to receiver 1, since receiver 1 already had a_1 as *side information*. Notice that during the two time slots, receiver 1 can decode 4 bits (2 bits/time), while receiver 2 can decode 1 bits (0.5 bits/time). The point (2,1) is not achieved yet due to unavoidable loss occurred in time 1. This loss, however, can be amortized by iterating the same operation. As this example shows, the previous two-staged scheme needs to be modified so as to incorporate an infinite number of stages.

Let us apply this idea to the Gaussian channel. The use of an infinite number of stages motivates the need for employing *block Markov encoding* [10], [11]. Similar to the symmetric case, we can now think of two possible schemes: (1) decode-and-forward (with message-splitting); and (2) amplify-and-forward (without message-splitting). As pointed out in Remark 4, in the Gaussian channel, private signals cannot be completely ignored, thereby incurring performance loss, thus the amplify-and-forward scheme without message-splitting has better performance. However, it requires tedious computations to compute the rate region, so we focus on the decode-and-forward scheme, although it induces a larger gap. As for a decoding operation, we employ backward decoding [12].

Here is the outline of our scheme. We employ block Markov encoding with a total size B of blocks. In block 1, each transmitter splits its own message into common and private parts and then sends a codeword superimposing the common and private messages. For power splitting, we adapt the idea of the simplified Han-Kobayashi scheme [9] where the private power is set such that the private signal is seen below the noise level at the other receiver. In block 2, with feedback, each transmitter decodes the other user's common message (sent in block 1) while treating the other user's private signal as noise. Two common

messages are then available at the transmitter: (1) its own message; and (2) the other user's message decoded with the help of feedback. Conditioned on these two common messages, each transmitter generates new common and private messages. It then sends the corresponding codeword. Each transmitter repeats this procedure until block $B-1$. In the last block B, to facilitate backward decoding, each transmitter sends the predetermined common message and a new private message. Each receiver waits until a total of B blocks have been received and then performs backward decoding. We will show that this scheme enables us to obtain an achievable rate region that approximates the capacity region.

Theorem 2: The feedback capacity region includes the set $\mathcal{R}$ of (R_1, R_2) such that for some $\rho\,(0 \le \rho \le 1)$

$$\begin{aligned}
R_1 &\le \log(1+\mathsf{SNR}_1+\mathsf{INR}_{21} \\
&\quad + 2\rho\sqrt{\mathsf{SNR}_1\cdot\mathsf{INR}_{21}}) - 1 && (18)\\
R_1 &\le \log(1+(1-\rho)\mathsf{INR}_{12}) \\
&\quad + \log\left(2+\frac{\mathsf{SNR}_1}{\mathsf{INR}_{12}}\right) - 2 && (19)\\
R_2 &\le \log(1+\mathsf{SNR}_2+\mathsf{INR}_{12} \\
&\quad + 2\rho\sqrt{\mathsf{SNR}_2\cdot\mathsf{INR}_{12}}) - 1 && (20)\\
R_2 &\le \log(1+(1-\rho)\mathsf{INR}_{21}) \\
&\quad + \log\left(2+\frac{\mathsf{SNR}_2}{\mathsf{INR}_{21}}\right) - 2 && (21)\\
R_1+R_2 &\le \log\left(2+\frac{\mathsf{SNR}_1}{\mathsf{INR}_{12}}\right) + \log(1+\mathsf{SNR}_2 \\
&\quad + \mathsf{INR}_{12} + 2\rho\sqrt{\mathsf{SNR}_2\cdot\mathsf{INR}_{12}}) - 2 && (22)\\
R_1+R_2 &\le \log\left(2+\frac{\mathsf{SNR}_2}{\mathsf{INR}_{21}}\right) + \log(1+\mathsf{SNR}_1 \\
&\quad + \mathsf{INR}_{21} + 2\rho\sqrt{\mathsf{SNR}_1\cdot\mathsf{INR}_{21}}) - 2. && (23)
\end{aligned}$$

Proof: Our achievable scheme is generic, not limited to the Gaussian IC. We therefore characterize an achievable rate region for discrete memoryless ICs and then choose an appropriate joint distribution to obtain the desired result. In fact, this generic scheme can also be applied to El Gamal–Costa deterministic IC (to be described in Section V).

Lemma 1: The feedback capacity region of the two-user discrete memoryless IC includes the set of (R_1, R_2) such that

$$\begin{aligned}
R_1 &\le I(U,U_2,X_1;Y_1) && (24)\\
R_1 &\le I(U_1;Y_2|U,X_2) + I(X_1;Y_1|U_1,U_2,U) && (25)\\
R_2 &\le I(U,U_1,X_2;Y_2) && (26)\\
R_2 &\le I(U_2;Y_1|U,X_1) + I(X_2;Y_2|U_1,U_2,U) && (27)\\
R_1+R_2 &\le I(X_1;Y_1|U_1,U_2,U) + I(U,U_1,X_2;Y_2) && (28)\\
R_1+R_2 &\le I(X_2;Y_2|U_1,U_2,U) + I(U,U_2,X_1;Y_1) && (29)
\end{aligned}$$

over all joint distributions $p(u)p(u_1|u)p(u_2|u)p(x_1|u_1,u)\cdot p(x_2|u_2,u)$.

Proof: See Appendix B. ■

Now we will choose the following Gaussian input distribution to complete the proof: $\forall k = 1,2$,

$$U \sim \mathcal{CN}(0,\rho); U_k \sim \mathcal{CN}(0,\lambda_{ck}); X_{pk} \sim \mathcal{CN}(0,\lambda_{pk}), \quad (30)$$

where $X_k = U + U_k + X_{kp}$; λ_{ck} and λ_{pk} indicate the powers allocated to the common and private message of transmitter k, respectively; and (U, U_k, X_{kp})'s are independent. By symmetry, it suffices to prove (18), (19) and (22).

To prove (18), consider $I(U,U_2,X_1;Y_1) = h(Y_1) - h(Y_1|U,U_2,X_1)$. Note

$$|K_{Y_1|X_1,U_2,U}| = 1 + \lambda_{p2}\mathsf{INR}_{21}. \quad (31)$$

As mentioned earlier, for power splitting, we adapt the idea of the simplified Han-Kobayashi scheme [9]. We set private power such that the private signal appears below the noise level at the other receiver. This idea mimics that of the deterministic IC example where the private bit is below the noise level so that it is invisible. The remaining power is assigned to the common message. Specifically, we set:

$$\lambda_{p2} = \min\left(\frac{1}{\mathsf{INR}_{21}}, 1\right), \quad \lambda_{c2} = 1 - \lambda_{p2} \quad (32)$$

This choice gives

$$\begin{aligned}
&I(U,U_2,X_1;Y_1) \\
&\quad = \log(1+\mathsf{SNR}_1+\mathsf{INR}_{21}+2\rho\sqrt{\mathsf{SNR}_1\cdot\mathsf{INR}_{21}}) - 1 \quad (33)
\end{aligned}$$

which proves (18). With the same power setting, we can compute

$$\begin{aligned}
I(U_1;Y_2|U,X_2) &= \log(1+(1-\rho)\mathsf{INR}_{12}) - 1 && (34)\\
I(X_1;Y_1|U,U_1,U_2) &= \log\left(2+\frac{\mathsf{SNR}_1}{\mathsf{INR}_{12}}\right) - 1. && (35)
\end{aligned}$$

This proves (19). Last, by (33) and (35), we prove (22). ■

Remark 6 (Three Types of Inequalities): In the nonfeedback case, it is shown in [9] that an approximate capacity region is characterized by five types of inequalities including the bounds for $2R_1 + R_2$ and $R_1 + 2R_2$. In contrast, in the feedback case, our achievable rate region is described by only three types of inequalities.[3] In Section VI-B, we will provide qualitative insights as to why the $2R_1 + R_2$ bound is missing with feedback.

Remark 7 (Connection to Related Work [26]): Our achievable scheme is essentially the same as the scheme introduced by Tuninetti [26] in a sense that the three techniques (message-splitting, block Markov encoding and backward decoding) are jointly employed. Although the author in [26] considers a different context (the conferencing encoder problem), Prabhakaran and Viswanath [21] have made an interesting connection between the feedback problem and the conferencing encoder problem. See [21] for details. Despite this close connection, however, the scheme in [26] uses five auxiliary random variables and thus requires further optimization. On the other hand, we obtain an explicit rate region by reducing those five

[3]It is still unknown whether or not the exact feedback capacity region includes only three types of inequalities.

auxiliary random variables into three and then choosing a joint input distribution appropriately.

B. An Outer Bound Region

Theorem 3: The feedback capacity region is included by the set $\bar{\mathcal{C}}$ of (R_1, R_2) such that for some $\rho\,(0 \le \rho \le 1)$

$$R_1 \le \log(1 + \mathsf{SNR}_1 + \mathsf{INR}_{21} + 2\rho\sqrt{\mathsf{SNR}_1 \cdot \mathsf{INR}_{21}}) \tag{36}$$

$$R_1 \le \log(1 + (1-\rho^2)\mathsf{INR}_{12}) + \log\left(1 + \frac{(1-\rho^2)\mathsf{SNR}_1}{1 + (1-\rho^2)\mathsf{INR}_{12}}\right) \tag{37}$$

$$R_2 \le \log(1 + \mathsf{SNR}_2 + \mathsf{INR}_{12} + 2\rho\sqrt{\mathsf{SNR}_2 \cdot \mathsf{INR}_{12}}) \tag{38}$$

$$R_2 \le \log(1 + (1-\rho^2)\mathsf{INR}_{21}) + \log\left(1 + \frac{(1-\rho^2)\mathsf{SNR}_2}{1 + (1-\rho^2)\mathsf{INR}_{21}}\right) \tag{39}$$

$$R_1 + R_2 \le \log\left(1 + \frac{(1-\rho^2)\mathsf{SNR}_1}{1 + (1-\rho^2)\mathsf{INR}_{12}}\right) + \log(1 + \mathsf{SNR}_2 + \mathsf{INR}_{12} + 2\rho\sqrt{\mathsf{SNR}_2 \cdot \mathsf{INR}_{12}}) \tag{40}$$

$$R_1 + R_2 \le \log\left(1 + \frac{(1-\rho^2)\mathsf{SNR}_2}{1 + (1-\rho^2)\mathsf{INR}_{21}}\right) + \log(1 + \mathsf{SNR}_1 + \mathsf{INR}_{21} + 2\rho\sqrt{\mathsf{SNR}_1 \cdot \mathsf{INR}_{21}}). \tag{41}$$

Proof: By symmetry, it suffices to prove the bounds of (36), (37) and (40). The bounds of (36) and (37) are nothing but cutset bounds. Hence, proving the noncutset bound of (40) is the main focus of this proof. Also recall that this noncutset bound is used to obtain the outer bound of (7) for the symmetric capacity in Theorem 1. We go through the proof of (36) and (37). We then focus on the proof of (40), where we will also provide insights as to the proof idea.

Proof of (36): Starting with Fano's inequality, we get:

$$N(R_1 - \epsilon_N) \le I\left(W_1; Y_1^N\right) \overset{(a)}{\le} \sum [h(Y_{1i}) - h(Z_{1i})]$$

where (a) follows from the fact that conditioning reduces entropy. Assume that X_1 and X_2 have covariance ρ, i.e., $E[X_1 X_2^*] = \rho$. Then, we get

$$h(Y_1) \le \log 2\pi e(1 + \mathsf{SNR}_1 + \mathsf{INR}_{21} + 2|\rho|\sqrt{\mathsf{SNR}_1 \cdot \mathsf{INR}_{21}}).$$

If (R_1, R_2) is achievable, then $\epsilon_N \to 0$ as $N \to \infty$. Therefore, we get the desired bound

$$\begin{aligned} R_1 &\le h(Y_1) - h(Z_1) \\ &\le \log(1 + \mathsf{SNR}_1 + \mathsf{INR}_{21} + 2|\rho|\sqrt{\mathsf{SNR}_1 \cdot \mathsf{INR}_{21}}). \end{aligned}$$

Proof of (37): Starting with Fano's inequality, we get

$$\begin{aligned} &N(R_1 - \epsilon_N) \\ &\quad \le I\left(W_1; Y_1^N, Y_2^N, W_2\right) \\ &\quad \overset{(a)}{=} \sum \left[h\left(Y_{1i}, Y_{2i} \,|\, W_2, Y_1^{i-1}, Y_2^{i-1}\right) - h(Z_{1i}) - h(Z_{2i})\right] \\ &\quad \overset{(b)}{=} \sum \left[h\left(Y_{1i}, Y_{2i} \,|\, W_2, Y_1^{i-1}, Y_2^{i-1}, X_2^i\right) - h(Z_{1i}) - h(Z_{2i})\right] \\ &\quad \overset{(c)}{=} \sum \left[h\left(Y_{2i} \,|\, W_2, Y_1^{i-1}, Y_2^{i-1}, X_2^i\right) - h(Z_{2i})\right] \\ &\qquad + \sum \left[h\left(Y_{1i} \,|\, W_2, Y_1^{i-1}, Y_2^{i-1}, X_2^i, Y_{2i}, S_1^i\right) - h(Z_{1i})\right] \\ &\quad \overset{(d)}{\le} \sum [h(Y_{2i} \,|\, X_{2i}) - h(Z_{2i}) + h(Y_{1i}|X_{2i}, S_{1i}) - h(Z_{1i})] \end{aligned}$$

where (a) follows from the fact that W_1 is independent from W_2 and $h(Y_1^N, Y_2^N | W_1, W_2) = h(Y_1^N, S_1^N | W_1, W_2) = \sum[h(Z_{1i}) + h(Z_{2i})]$ (see Claim 1); (b) follows from the fact that X_2^i is a function of (W_2, Y_2^{i-1}); (c) follows from the fact that S_1^i is a function of (Y_2^i, X_2^i); (d) follows from the fact that conditioning reduces entropy. Hence, we get the desired result

$$\begin{aligned} R_1 &\le h(Y_2|X_2) - h(Z_2) + h(Y_1|X_2, S_1) - h(Z_1) \\ &\overset{(a)}{\le} \log\left(1 + (1 - |\rho|^2)\mathsf{INR}_{12}\right) \\ &\quad + \log\left(1 + \frac{(1-|\rho|^2)\mathsf{SNR}_1}{1 + (1-|\rho|^2)\mathsf{INR}_{12}}\right) \end{aligned}$$

where (a) follows from the fact that

$$h(Y_2|X_2) \le \log 2\pi e\left(1 + (1 - |\rho|^2)\mathsf{INR}_{12}\right), \tag{42}$$

$$h(Y_1|X_2, S_1) \le \log 2\pi e\left(1 + \frac{(1-|\rho|^2)\mathsf{SNR}_1}{1 + (1-|\rho|^2)\mathsf{INR}_{12}}\right). \tag{43}$$

The inequality of (43) is obtained as follows. Given (X_2, S_1), the variance of Y_1 is upper-bounded by

$$\mathrm{Var}[Y_1|X_2, S_1] \le K_{Y_1} - K_{Y_1(X_2,S_1)} K_{(X_2,S_1)}^{-1} K_{Y_1(X_2,S_1)}^*$$

where

$$\begin{aligned} K_{Y_1} &= E\left[|Y_1|^2\right] \\ &= 1 + \mathsf{SNR}_1 + \mathsf{INR}_{21} + \rho g_{11}^* g_{21} + \rho^* g_{11} g_{21}^* \\ K_{Y_1(X_2,S_1)} &= E[Y_1[X_2^*, S_1^*]] \\ &= [\rho g_{11} + g_{21}, g_{12}^* g_{11} + \rho^* g_{21} g_{12}^*], \\ K_{(X_2,S_1)} &= E\left[\begin{bmatrix} |X_2|^2 & X_2 S_1^* \\ X_2^* S_1 & |S_1|^2 \end{bmatrix}\right] \\ &= \begin{bmatrix} 1 & \rho^* g_{12}^* \\ \rho g_{12} & 1 + \mathsf{INR}_{12} \end{bmatrix}. \end{aligned}$$

By further calculation, we can get (43).

Claim 1: $h(Y_1^N, S_1^N \,|\, W_1, W_2) = \sum[h(Z_{1i}) + h(Z_{2i})]$.

Proof:

$$\begin{aligned}
&h\left(Y_1^N, S_1^N | W_1, W_2\right)\\
&\quad = \sum h\left(Y_{1i}, S_{1i} | W_1, W_2, Y_1^{i-1}, S_1^{i-1}\right)\\
&\quad \overset{(a)}{=} \sum h\left(Y_{1i}, S_{1i} | W_1, W_2, Y_1^{i-1}, S_1^{i-1}, X_{1i}, X_{2i}\right)\\
&\quad \overset{(b)}{=} \sum h\left(Z_{1i}, Z_{2i} | W_1, W_2, Y_1^{i-1}, S_1^{i-1}, X_{1i}, X_{2i}\right)\\
&\quad \overset{(c)}{=} \sum [h(Z_{1i}) + h(Z_{2i})],
\end{aligned}$$

where (a) follows from the fact that X_{1i} is a function of (W_1, Y_1^{i-1}) and X_{2i} is a function of (W_2, S_1^{i-1}) (by Claim 2); (b) follows from the fact that $Y_{1i} = g_{11}X_{1i} + g_{21}X_{2i} + Z_{1i}$ and $S_{1i} = g_{12}X_{1i} + Z_{2i}$; (c) follows from the memoryless property of the channel and the independence assumption of Z_{1i} and Z_{2i}. ■

Claim 2: For all $i \geq 1, X_1^i$ is a function of (W_1, S_2^{i-1}) and X_2^i is a function of (W_2, S_1^{i-1}).

Proof: By symmetry, it is enough to prove only one. Notice that X_2^i is a function of (W_2, Y_2^{i-1}) and Y_2^{i-1} is a function of (X_2^{i-1}, S_1^{i-1}). Hence, X_2^i is a function of $(W_2, X_2^{i-1}, S_1^{i-1})$. Iterating the same argument, we conclude that X_2^i is a function of (W_2, X_{21}, S_1^{i-1}). Since X_{21} depends only on W_2, we complete the proof. ■

Proof of (40): The proof idea is based on the genie-aided argument [14]. However, finding an appropriate genie is not simple since there are many possible combinations of the random variables. The deterministic IC example in Fig. 5(b) gives insights into this. Note that providing a_1 and (b_1, b_2, b_3) to receiver 1 does not increase the rate R_1, i.e., these are *useless gifts*. This motivates us to choose the genie as $(g_{12}X_1, W_2)$. However, in the Gaussian channel, providing $g_{12}X_1$ is equivalent to providing X_1. This is of course too much information, inducing a loose upper bound. Inspired by the technique in [9], we instead consider a noisy version of $g_{12}X_1$

$$S_1 = g_{12}X_1 + Z_2. \tag{44}$$

The intuition behind this is that we cut off $g_{12}X_1$ at the noise level. Indeed this matches the intuition from the deterministic IC. This genie together with W_2 turns out to lead to the desired tight upper bound.

Starting with Fano's inequality, we get

$$\begin{aligned}
&N(R_1 + R_2 - \epsilon_N)\\
&\quad \leq I\left(W_1; Y_1^N\right) + I\left(W_2; Y_2^N\right)\\
&\quad \overset{(a)}{\leq} I\left(W_1; Y_1^N, S_1^N, W_2\right) + I\left(W_2; Y_2^N\right)\\
&\quad \overset{(b)}{=} h\left(Y_1^N, S_1^N | W_2\right) - h\left(Y_1^N, S_1^N | W_1, W_2\right)\\
&\qquad + I\left(W_2; Y_2^N\right)\\
&\quad \overset{(c)}{=} h\left(Y_1^N, S_1^N \,|\, W_2\right)\\
&\qquad - \sum [h(Z_{1i}) + h(Z_{2i})] + I\left(W_2; Y_2^N\right)\\
&\quad \overset{(d)}{=} h\left(Y_1^N | S_1^N, W_2\right)\\
&\qquad - \sum h(Z_{1i}) + h\left(Y_2^N\right) - \sum h(Z_{2i})\\
&\quad \overset{(e)}{=} h\left(Y_1^N | S_1^N, W_2, X_2^N\right)\\
&\qquad - \sum h(Z_{1i}) + h\left(Y_2^N\right) - \sum h(Z_{2i})\\
&\quad \overset{(f)}{\leq} \sum_{i=1}^{N} [h(Y_{1i} | S_{1i}, X_{2i}) - h(Z_{1i})\\
&\qquad + h(Y_{2i}) - h(Z_{2i})]
\end{aligned}$$

where (a) follows from the fact that adding information increases mutual information (providing a *genie*); (b) follows from the independence of W_1 and W_2; (c) follows from $h(Y_1^N, S_1^N | W_1, W_2) = \sum [h(Z_{1i}) + h(Z_{2i})]$ (see Claim 1); (d) follows from $h(S_1^N \,|\, W_2) = h(Y_2^N \,|\, W_2)$ (see Claim 3); (e) follows from the fact that X_2^N is a function of (W_2, S_1^{N-1}) (see Claim 2); (f) follows from the fact that conditioning reduces entropy.

Hence, we get

$$R_1 + R_2 \leq h(Y_1 \,|\, S_1, X_2) - h(Z_1) + h(Y_2) - h(Z_2).$$

Note that

$$\begin{aligned}
&h(Y_2) \leq\\
&\quad \log 2\pi e(1 + \mathsf{SNR}_2 + \mathsf{INR}_{12} + 2|\rho|\sqrt{\mathsf{SNR}_2 \cdot \mathsf{INR}_{12}}).
\end{aligned} \tag{45}$$

From (43) and (45), we get the desired upper bound.

Claim 3: $h(S_1^N \,|\, W_2) = h(Y_2^N \,|\, W_2)$.

Proof:

$$\begin{aligned}
h\left(Y_2^N \,|\, W_2\right) &= \sum h\left(Y_{2i} \,|\, Y_2^{i-1}, W_2\right)\\
&\overset{(a)}{=} \sum h\left(S_{1i} \,|\, Y_2^{i-1}, W_2\right)\\
&\overset{(b)}{=} \sum h\left(S_{1i} \,|\, Y_2^{i-1}, W_2, X_2^i, S_1^{i-1}\right)\\
&\overset{(c)}{=} \sum h\left(S_{1i} \,|\, W_2, S_1^{i-1}\right) = h\left(S_1^N \,|\, W_2\right)
\end{aligned}$$

where (a) follows from the fact that Y_{2i} is a function of (X_{2i}, S_{1i}) and X_{2i} is a function of (W_2, Y_2^{i-1}); (b) follows from the fact that X_2^i is a function of (W_2, Y_2^{i-1}) and S_1^{i-1} is a function of (Y_2^{i-1}, X_2^{i-1}); (c) follows from the fact that Y_2^{i-1} is a function of (X_2^{i-1}, S_1^{i-1}) and X_2^i is a function of (W_2, S_1^{i-1}) (by Claim 2). ■

■

C. 2-Bit Gap to the Capacity Region

Theorem 4: The gap between the inner and outer bound regions (given in Theorems 2 and 3) is at most 2 bits/s/Hz/user

$$\mathcal{R} \subseteq \mathcal{C} \subseteq \bar{\mathcal{C}} \subseteq \mathcal{R} \oplus ([0,2] \times [0,2]). \tag{46}$$

Proof: The proof is immediate by Theorem 2 and 3. We define δ_1 to be the difference between $\min\{(36), (37)\}$ and $\min\{(18), (19)\}$. Similarly, we define δ_2 and δ_{12}. Straightforward computation gives

$$\begin{aligned}
\delta_1 \leq \max\Bigg\{1, \log\left(1 + \frac{\mathsf{SNR}_1}{1 + \mathsf{INR}_{12}}\right)\\
- \log\left(2 + \frac{\mathsf{SNR}_1}{\mathsf{INR}_{12}}\right) + 2\Bigg\} \leq 2.
\end{aligned}$$

Similarly, we get $\delta_2 \leq 2$ and $\delta_{12} \leq 2$. This completes the proof. ■

Remark 8 (Why does a 2-bit gap occur?): The achievable scheme for the capacity region involves message-splitting. As mentioned in Remark 4, message-splitting incurs some loss in the process of decoding the common message while treating private signals as noise. Accounting for the effect of private signals, the effective noise power becomes double, thus incurring a 1-bit gap. The other 1-bit gap comes from a relay structure of the feedback IC. To see this, consider an extreme case where user 2's rate is completely ignored. In this case, we can view the $[transmitter2, receiver2]$ communication pair as a single relay which only helps the $[transmitter1, receiver1]$ communication pair. It has been shown in [7] that for this single relay Gaussian channel, the worst-case gap between the best known inner bound [10] and the outer bound is 1 bit/s/Hz. This incurs the other 1-bit gap. This 2-bit gap is based on the outer bound region in Theorem 3, which allows for arbitrary correlation between the transmitters. So, one can expect that the actual gap to the capacity region is less than 2 bits.

Remark 9 (Reducing the gap): As discussed, the amplify-and-forward scheme has the potential to reduce the gap. However, due to the inherent relay structure, reducing the gap to less than one bit is challenging. As long as no significant progress is made on the single relay Gaussian channel, one cannot easily reduce the gap further.

Remark 10 (Comparison with the two-staged scheme): Specializing to the symmetric rate, it can be shown that the *infinite*-staged scheme in Theorem 2 can achieve the symmetric capacity to within 1 bit. Coincidentally, this gap matches the gap result of the *two*-staged scheme in Theorem 1. However, the 1-bit gap comes from different reasons. In the infinite-staged scheme, the 1-bit gap comes from message-splitting. In contrast, in the two-staged scheme, the gap is due to lack of beamforming gain. One needs to come up with a new technique that combines these two schemes to reduce the gap to less than one bit.

V. Feedback Capacity Region of the El Gamal–Costa Model

We have so far made use of the linear deterministic IC to provide insights for approximating the feedback capacity region of the Gaussian IC. The linear deterministic IC is a special case of El Gamal–Costa deterministic IC [14]. In this section, we establish the exact feedback capacity region for this general class of deterministic ICs.

Fig. 10(a) illustrates El Gamal–Costa deterministic IC with feedback. The key condition of this model is given by

$$\begin{aligned} H(V_2|Y_1, X_1) &= 0 \\ H(V_1|Y_2, X_2) &= 0 \end{aligned} \tag{47}$$

where V_k is a part of $X_k (k = 1, 2)$, visible to the other receiver. This implies that in any working system where X_1 and X_2 are decodable at receivers 1 and 2, respectively, V_1 and V_2 are completely determined at receivers 2 and 1, respectively, i.e., these are common signals.

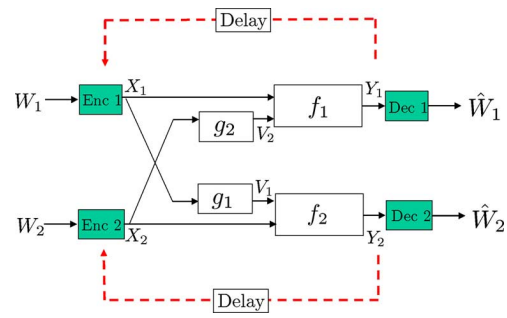

Fig. 10. El Gamal–Costa deterministic IC with feedback.

Theorem 5: The feedback capacity region of El Gamal–Costa deterministic IC is the set of (R_1, R_2) such that

$$\begin{aligned} R_1 &\leq \min\{H(Y_1), H(Y_2|X_2, U) + H(Y_1|V_1, V_2, U)\} \\ R_2 &\leq \min\{H(Y_2), H(Y_1|X_1, U) + H(Y_2|V_1, V_2, U)\} \\ R_1 + R_2 &\leq \min\{H(Y_1|V_1, V_2, U) + H(Y_2), \\ &\qquad H(Y_2|V_2, V_1, U) + H(Y_1)\} \end{aligned}$$

for some joint distribution $p(u, x_1, x_2) = p(u)p(x_1|u)p(x_2|u)$. Here U is a discrete random variable which takes on values in the set $\mathcal{U}$ where $|\mathcal{U}| \leq \min(|\mathcal{V}_1||\mathcal{V}_2|, |\mathcal{Y}_1|, |\mathcal{Y}_2|) + 3$.

Proof: Achievability proof is straightforward by Lemma 1. Set $U_k = V_k, \forall k$. Fix a joint distribution $p(u)p(u_1|u)p(u_2|u)p(x_1|u_1, u)p(x_2|u_2, u)$. We now write a joint distribution $p(u, x_1, x_2, u_1, u_2)$ in two different ways:

$$\begin{aligned} &p(u, x_1, x_2, u_1, u_2) \\ &\quad = p(u)p(x_1|u)p(x_2|u)\delta(u_1 - g_1(x_1))\delta(u_2 - g_2(x_2)) \\ &\quad = p(u)p(u_1|u)p(u_2|u)p(x_1|u_1, u)p(x_2|u_2, u) \end{aligned}$$

where $\delta(\cdot)$ indicates the Kronecker delta function. This gives

$$\begin{aligned} p(x_1|u) &:= \frac{p(x_1|u_1, u)p(u_1|u)}{\delta(u_1 - g_1(x_1))} \\ p(x_2|u) &:= \frac{p(x_2|u_2, u)p(u_2|u)}{\delta(u_2 - g_2(x_2))} \end{aligned}$$

Now we can generate a joint distribution $p(u)p(x_1 \mid u)p(x_2|u)$. Hence, we complete the achievability proof. See Appendix C for converse proof. ■

As a by-product, we obtain the feedback capacity region of the linear deterministic IC.

Corollary 1: The feedback capacity region of the linear deterministic IC is the set of (R_1, R_2) such that

$$\begin{aligned} R_1 &\leq \min\{\max(n_{11}, n_{12}), \max(n_{11}, n_{21})\} \\ R_2 &\leq \min\{\max(n_{22}, n_{21}), \max(n_{22}, n_{12})\} \\ R_1 + R_2 &\leq \min\{\max(n_{22}, n_{12}) + (n_{11} - n_{12})^+, \\ &\qquad \max(n_{11}, n_{21}) + (n_{22} - n_{21})^+\}. \end{aligned}$$

Proof: The proof is straightforward by Theorem 5. The capacity region is achieved when U is constant; and X_1 and X_2 are independent and uniformly distributed. ■

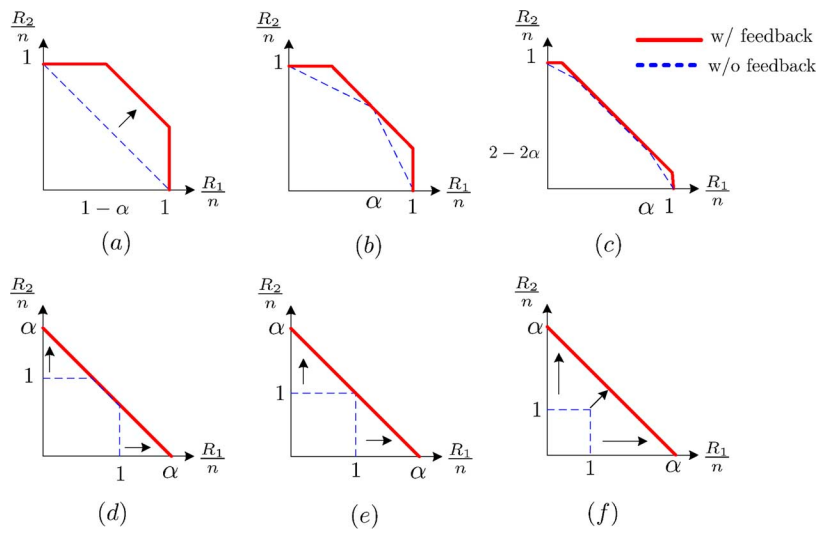

Fig. 11. Feedback capacity region of the linear deterministic IC. This shows that feedback gain could be significant in terms of the capacity region, even when there is no improvement due to feedback in terms of the symmetric capacity. (a) $\alpha = \frac{m}{n} = \frac{1}{2}$, (b) $\alpha = \frac{2}{3}$, (c) $\alpha = \frac{4}{5}$, (d) $\alpha = \frac{3}{2}$, (e) $\alpha = 2$, (f) $\alpha = 3$.

VI. Role of Feedback

Recall in Fig. 1 that feedback gain is *bounded* for $0 \leq \alpha \leq \frac{2}{3}$ in terms of the symmetric rate. So a natural question that arises is to ask whether feedback gain is marginal also from a capacity-region perspective in this parameter range. With the help of Corollary 1, we show that feedback can provide *multiplicative* gain even in this regime. We next revisit the resource hole interpretation in Remark 2. With this interpretation, we address another interesting question posed in Section IV: why is the $2R_1 + R_2$ bound missing with feedback?

A. Feedback Gain From a Capacity Region Perspective

Fig. 11 shows the feedback capacity region of the linear deterministic IC under the symmetric channel setting: $n = n_{11} = n_{22}$ and $m = n_{12} = n_{21}$. Interestingly, while for $\frac{2}{3} \leq \alpha \leq 2$, the symmetric capacity does not improve with feedback, the feedback capacity region is enlarged even for this regime. This implies that feedback gain could be significant in terms of the capacity region, even when there is no improvement with feedback in terms of the symmetric capacity.

B. Resource Hole Interpretation

Recall the role of feedback in Remark 2: feedback maximizes resource utilization by filling up all the resource holes underutilized in the nonfeedback case. Using this interpretation, we can provide an intuitive explanation why $2R_1 + R_2$ bound is missing with feedback.

To see this, consider an example where $2R_1 + R_2$ bound is active in the nonfeedback case. Fig. 12(a) shows an example where a corner point of (3,0) can be achieved. Observe that at the two receivers, the five signal levels are consumed out of the six signal levels. There is one resource hole. This resource hole is closely related to the $2R_1 + R_2$ bound, which will be shown in Fig. 12(b).

Suppose the $2R_1 + R_2$ bound is active. This implies that if R_1 is reduced by 1 bit, then R_2 should be increased by 2 bits. Suppose that in order to decrease R_1 by 1 bit, transmitter 1 sends no information on the second signal level. We then see the two empty signal levels at the two receivers (marked as the gray balls): one at the second level at receiver 1; the other at the bottom level at receiver 2. Transmitter 2 can now send 1 bit on the bottom level to increase R_2 by 1 bit (marked as the thick red line). Also it allows transmitter 2 to send one more bit on the top level. This implies that the top level at receiver 2 must be a resource hole in the previous case. This observation combined with the following observation can give an answer to the question.

Fig. 12(c) shows the feedback role that it fills up all the resource holes to maximize resource utilization. We employ the same feedback strategy used in Fig. 9 to obtain the result in Fig. 12(c). Notice that with feedback, all of the resource holes are filled up except a hole in the first stage, which can be amortized by employing an infinite number of stages. Therefore, we can now see why the $2R_1 + R_2$ bound is missing with feedback.

C. Side Information Interpretation

By carefully looking at the feedback scheme in Fig. 12(c), we develop another interpretation as to the role of feedback. Recall that in the nonfeedback case that achieves the (3,0) corner point, the broadcast nature of the wireless medium precludes transmitter 2 from using any levels, as transmitter 1 is already using all of the levels. In contrast, if feedback is allowed, transmitter 2 can now use some levels to improve the nonfeedback rate. Suppose that transmitters 1 and 2 send (a_1, a_2, a_3) and b_1 through their signal levels, respectively. Receivers 1 and 2 then get the bits (a_1, a_2, a_3) and $(a_2, b_1 \oplus a_2)$, respectively. With feedback, in the second stage, the bit a_2—received cleanly at the desired receiver while interfering with b_1 at the other receiver—can be exploited as *side information* to increase the nonfeedback capacity. For example, with feedback transmitter 2 decodes the other user's bit a_2 and forwards it through the top level. This transmission allows receiver 2 to refine the corrupted bit b_1 from $b_1 \oplus a_2$. This seems to cause interference to receiver 1. But this does not cause interference since receiver 1 already had the *side information* of a_2 from the previous broadcasting. We exploited

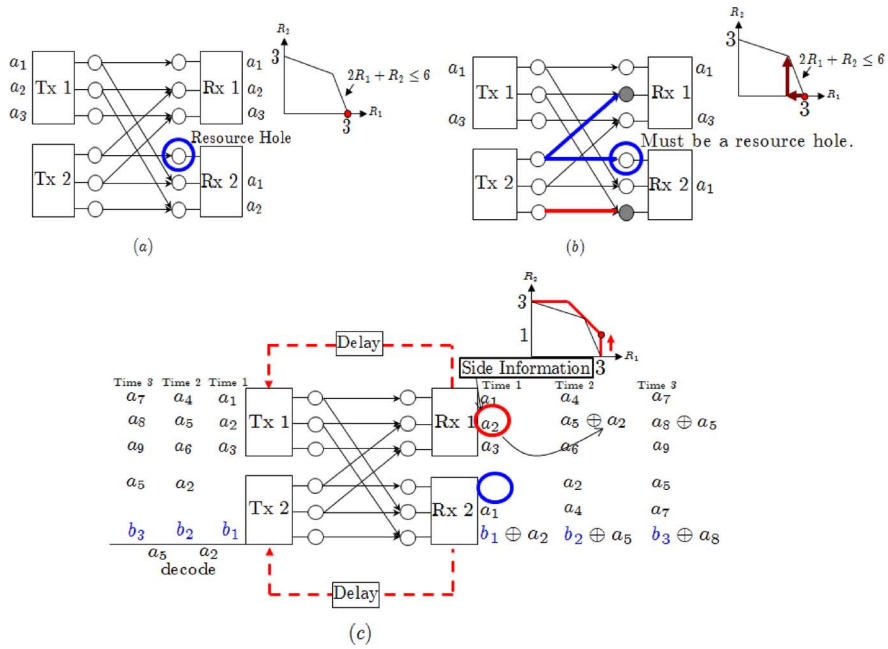

Fig. 12. Relationship between a resource hole and $2R_1 + R_2$ bound. The $2R_1 + R_2$ bound is missing with feedback. (a) A resource hole vs. $2R_1 + R_2$ bound, (b) Whenever $2R_1 + R_2$ is active, there is a resource hole, (c) Feedback fills up all resource holes to maximize resource utilization.

the side information with the help of feedback to refine the corrupted bit without causing interference. With this interpretation, we can now make a connection between our feedback problem and a variety of other problems in network information theory [27]–[32].

Connection to Other Problems: In 2000, Alshwede-Cai-Li-Yeung [27] invented the breakthrough concept of network coding and came up with the butterfly example where network coding is used to exploit side information. This result shows that exploiting side information plays an important role in decoding the desired signals from the network-coded signals (equations). This network coding idea combined with the idea of exploiting side information was shown to be powerful in wireless networks as well [28], [29]. Specifically, in the context of two-way relay channels, it was shown that the broadcast nature of wireless medium can be exploited to generate side information, and this generated side information plays a crucial role in increasing capacity. Subsequently, the index coding problem was introduced by Bar-Yossef, *et al.* [30] where the significant impact of side information was directly addressed.

In our work, as a consequence of addressing the two-user Gaussian IC with feedback, we develop an interpretation as to the role of feedback: feedback enables receivers to exploit their received signals as *side information*, thus improving the non-feedback capacity significantly. With the help of this interpretation, we find that all of the above problems can be intimately linked through the common idea of *exploiting side information*.

Very recently, the authors in [31] and [32] came up with interesting results on feedback capacity. Georgiadis and Tassiulas [31] showed that feedback can significantly increase the capacity of the broadcast erasure channel. Maddah-Ali and Tse [32] showed that *channel state feedback*, although it is *outdated*, can increase the nonfeedback MIMO broadcast channel capacity. We find that interestingly the role of feedback in these channels is the same as that in our problem: feedback enables receivers to exploit their received signals as side information to increase capacity.

VII. Discussion

A. Comparison to Related Work [16]–[18]

For the symmetric Gaussian IC, Kramer [16], [17] developed a feedback strategy based on the Schalkwijk–Kailath scheme [33] and the Ozarow scheme [6]. Due to lack of closed-form rate-formula for the scheme, we cannot see how Kramer's scheme is close to our symmetric rate in Theorem 1. To see this, we compute the generalized degrees-of-freedom of Kramer's scheme.

Lemma 2: The generalized degrees-of-freedom of Kramer's scheme is given by

$$\underline{d}(\alpha) = \begin{cases} 1-\alpha, & 0 \le \alpha < \frac{1}{3}; \\ \frac{3-\alpha}{4}, & \frac{1}{3} \le \alpha < 1; \\ \frac{1+\alpha}{4}, & \alpha \ge 1. \end{cases} \tag{48}$$

Proof: See Appendix D. ■

Note in Fig. 13 that Kramer's scheme can be arbitrarily far from optimality, i.e., it has an unbounded gap to the symmetric capacity for all values of α except $\alpha = 1$. We also plot the symmetric rate for finite channel parameters as shown in Fig. 14. Notice that Kramer's scheme is very close to the outer bounds only when INR is similar to SNR. In fact, the capacity theorem in [17] says that they match each other at $\mathsf{INR} = \mathsf{SNR} - \sqrt{2\mathsf{SNR}}$. However, if INR is quite different from SNR, it becomes far away from the outer bounds. Also note that our new bound is

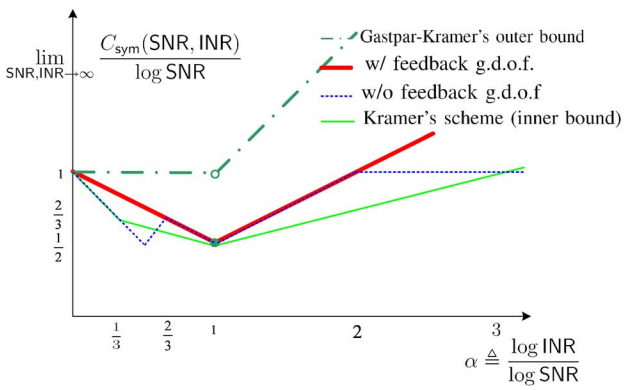

Fig. 13. Generalized degrees-of-freedom comparison.

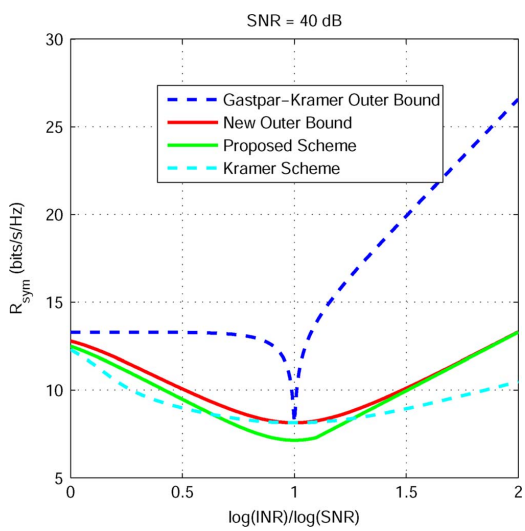

Fig. 14. Symmetric rate comparison.

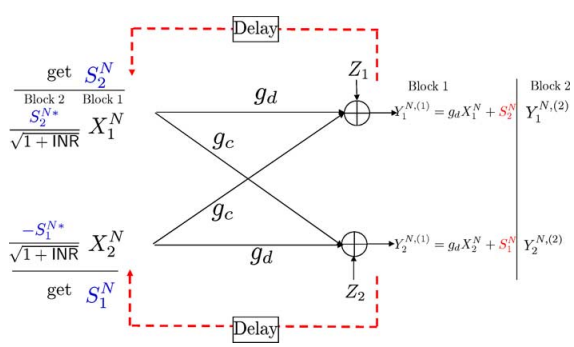

Fig. 15. Achievable scheme in the symmetric Gaussian IC: Alamouti-based amplify-and-forward scheme.

much tighter than Gastpar-Kramer's outer bounds in [16] and [18].

B. Closing the Gap

Less than 1-bit gap to the symmetric capacity: Fig. 14 implies that our achievable scheme can be improved especially when $\alpha \approx 1$ where beamforming gain plays a significant role. As mentioned earlier, our two-staged scheme completely loses beamforming gain. In contrast, Kramer's scheme captures the beamforming gain. As discussed in Remark 10, one may develop a unified scheme that beats both schemes for all channel parameters to reduce the worst-case gap.

Less than 2-bit gap to the capacity region: As mentioned in Remark 8, a 2-bit gap to the feedback capacity region can be improved up to a 1-bit gap. The idea is to remove message splitting. Recall that the Alamouti-based amplify-and-forward scheme in Theorem 1 improves the performance by removing message splitting. Translating the same idea to the characterization of the capacity region is needed for the improvement. A noisy binary expansion model in Fig. 16 may give insights into this.

C. Extension to Gaussian MIMO ICs With Feedback

The feedback capacity result for El Gamal–Costa model can be extended to Teletar-Tse IC [15] where in Fig. 10, f_k's are deterministic functions satisfying El Gamal–Costa condition (47) while g_k's follow arbitrary probability distributions. Once extended, one can infer an approximate feedback capacity region of the two-user Gaussian MIMO IC, as [15] did in the nonfeedback case.

VIII. Conclusion

We have established the feedback capacity region to within 2 bits/s/Hz/user and the symmetric capacity to within 1 bit/s/Hz/user universally for the two-user Gaussian IC with feedback. The Alamouti scheme inspires our two-staged achievable scheme meant for the symmetric rate. For an achievable rate region, we have employed block Markov encoding to incorporate an infinite number of stages. A new outer bound was derived to provide an approximate characterization of the capacity region. As a side-generalization, we have characterized the exact feedback capacity region of El Gamal–Costa deterministic IC.

An interesting consequence of our result is that feedback could provide *multiplicative* gain in many-to-many channels unlike point-to-point, many-to-one, or one-to-many channels. We develop two interpretations as to how feedback can provide significant gain. One interpretation is that feedback maximizes resource utilization by filling up all the resource holes under-utilized in the nonfeedback case. The other interpretation is that feedback can exploit received signals as side information to increase capacity. The latter interpretation leads us to make a connection to other problems.

Appendix A
Achievable Scheme for the Symmetric Rate of (6)

The scheme uses two stages (blocks). In the first stage, each transmitter k sends codeword X_k^N with rate R_k. In the second stage, with feedback transmitter 1 gets the interference plus noise: $S_2^N = g_c X_2^N + Z_1^{(1),N}$. Now the complex conjugate technique based on Alamouti's scheme is applied to make X_1^N and S_2^N well separable. Transmitters 1 and 2 send $\frac{S_2^{N*}}{\sqrt{1+\mathsf{INR}}}$ and $-\frac{S_1^{N*}}{\sqrt{1+\mathsf{INR}}}$, respectively, where $\sqrt{1+\mathsf{INR}}$ is a normalization factor to meet the power constraint.

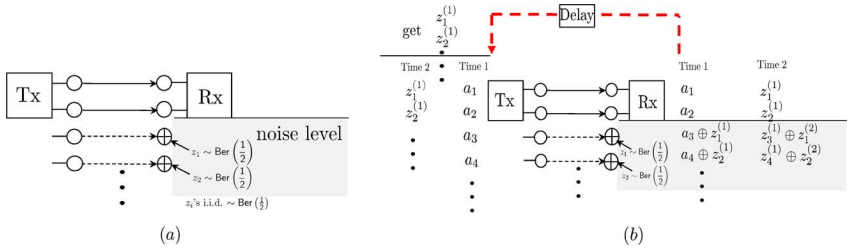

Fig. 16. Noisy binary expansion model. Noise is assumed to be a $\mathsf{Ber}(\frac{1}{2})$ random variable i.i.d. across time slots (memoryless) and levels. This induces the same capacity as that of the deterministic channel, so it matches the Gaussian channel capacity in the high SNR regime. (a) A noisy binary-expansion model, (b) Interpretation of Schalkwijk–Kailath scheme.

Receiver 1 can then gather the two received signals: for $1 \leq i \leq N$,

$$\mathbf{Y}_i \triangleq \begin{bmatrix} Y_{1i}^{(1)} \\ Y_{1i}^{(2)*} \end{bmatrix} = \begin{bmatrix} g_d & 1 \\ -\frac{\mathsf{INR}}{\sqrt{1+\mathsf{INR}}} & \frac{g_d^*}{\sqrt{1+\mathsf{INR}}} \end{bmatrix} \begin{bmatrix} X_{1i} \\ S_{2i} \end{bmatrix} + \begin{bmatrix} 0 \\ -\frac{g_c^*}{\sqrt{1+\mathsf{INR}}} Z_{2i}^{(1)} + Z_{1i}^{(2)*} \end{bmatrix}.$$

Under Gaussian input distribution, we can compute the rate under MMSE demodulation

$$\frac{1}{2} I(X_{1i}; \mathbf{Y}_i) = \frac{1}{2} h(\mathbf{Y}_i) - \frac{1}{2} h(\mathbf{Y}_i | X_{1i}) = \frac{1}{2} \log \frac{|K_{\mathbf{Y}_i}|}{|K_{\mathbf{Y}_i|X_{1i}}|}.$$

Straightforward calculations give

$$|K_{\mathbf{Y}_i}| = \left| \begin{bmatrix} 1+\mathsf{SNR}+\mathsf{INR} & \frac{g_d}{\sqrt{1+\mathsf{INR}}} \\ \frac{g_d^*}{\sqrt{1+\mathsf{INR}}} & 1+\mathsf{SNR}+\mathsf{INR} \end{bmatrix} \right| = (1+\mathsf{SNR}+\mathsf{INR})^2 - \frac{\mathsf{SNR}}{1+\mathsf{INR}}$$

$$|K_{\mathbf{Y}_i|X_{1i}}| = \left| \begin{bmatrix} 1+\mathsf{INR} & g_d\sqrt{1+\mathsf{INR}} \\ g_d^*\sqrt{1+\mathsf{INR}} & \mathsf{SNR}+\frac{2\mathsf{INR}+1}{\mathsf{INR}+1} \end{bmatrix} \right| = 1+2\mathsf{INR}.$$

Therefore, we get the desired result: the right term in (6).

$$R_{\mathsf{sym}} = \frac{1}{2} \log \left(\frac{(1+\mathsf{SNR}+\mathsf{INR})^2 - \frac{\mathsf{SNR}}{1+\mathsf{INR}}}{1+2\mathsf{INR}} \right). \tag{49}$$

Intuition Behind the Proposed Scheme: To provide intuition behind our proposed scheme, we introduce a new model that we call a noisy binary expansion model, illustrated in Fig. 16(a). In the nonfeedback Gaussian channel, due to the absence of noise information at transmitter, transmitter has no chance to refine the corrupted received signal. On the other hand, if feedback is allowed, noise can be learned. Sending noise information (innovation) enables to refine the corrupted signal: the Schalkwijk–Kailath scheme [33]. However, the linear deterministic model cannot capture interplay between noise and signal. To capture this issue, we slightly modify the deterministic model so as to reflect the effect of noise. In this model, we assume that noise is a $\mathsf{Ber}(\frac{1}{2})$ random variable i.i.d. across time slots (memoryless) and levels. This induces the same capacity as that of the deterministic channel, so it matches the Gaussian channel capacity in the high SNR regime.

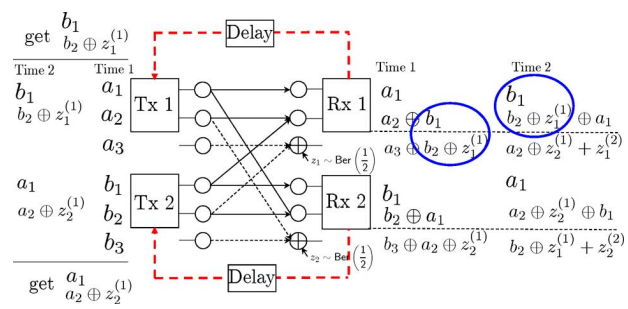

Fig. 17. Intuition behind the Alamouti-based amplify-and-forward scheme.

As a stepping stone towards the interpretation of the proposed scheme, let us first understand Schalkwijk–Kailath scheme [33] using this model. Fig. 16(b) illustrates an example where 2 bits/time can be sent with feedback. In time 1, transmitter sends independent bit streams $(a_1, a_2, a_3, a_4, \ldots)$. Receiver then gets $(a_1, a_2, a_3 \oplus z_1^{(1)}, a_4 \oplus z_2^{(1)}, \ldots)$ where $z_i^{(j)}$ indicates an i.i.d. $\mathsf{Ber}(\frac{1}{2})$ random variable of noise level i at time j. With feedback, transmitter can get noise information $(0, 0, z_1^{(1)}, z_2^{(1)}, \ldots)$ by subtracting the transmitted signals (sent previously) from the received feedback. This process corresponds to an MMSE operation in Schalkwijk–Kailath scheme: computing innovation. Transmitter scales the noise information to shift it by 2 levels and then sends the shifted version. The shifting operation corresponds to a scaling operation in Schalkwijk–Kailath scheme. Receiver can now recover (a_3, a_4) corrupted by $(z_1^{(1)}, z_2^{(1)})$ in the previous slot. We repeat this procedure.

The viewpoint based on the binary expansion model can provide intuition behind our proposed scheme (see Fig. 17). In the first stage, each transmitter sends three independent bits: two bits above the noise level; one bit below the noise level. Transmitters 1 and 2 send (a_1, a_2, a_3) and (b_1, b_2, b_3), respectively. Receiver 1 then gets: (1) the clean signal a_1; (2) the interfered signal $a_2 \oplus b_1$; and (3) the interfered-and-noised signal $a_3 \oplus b_2 \oplus z_1^{(1)}$. Similarly for receiver 2. In the second stage, with feedback, each transmitter can get interference plus noise by subtracting the transmitted signals from the feedback. Transmitters 1 and 2 get $(0, b_1, b_2 \oplus z_1^{(1)})$ and $(0, a_1, a_2 \oplus z_2^{(1)})$, respectively. Next, each transmitter scales the subtracted signal subject to the power constraint and then forwards the scaled signal. Transmitters 1 and 2 send $(b_1, b_2 \oplus z_1^{(1)})$ and $(a_1, a_2 \oplus z_2^{(1)})$, respectively. Each receiver can then gather the two received signals to decode 3 bits. From this figure, one can see that it is not needed to send additional information on top of innovation in the

second stage. Therefore, this scheme matches Alamouti-based amplify-and-forward scheme in the Gaussian channel.

APPENDIX B
PROOF OF LEMMA 1

Codebook Generation: Fix a joint distribution $p(u)p(u_1\,|\,u)p(u_2\,|\,u)p(x_1\,|\,u_1,u)p(x_2\,|\,u_2,u)$. First generate $2^{N(R_{1c}+R_{2c})}$ independent codewords $u^N(i,j)$, $i \in \{1,\ldots,2^{NR_{1c}}\}$, $j \in \{1,\ldots,2^{NR_{2c}}\}$, according to $\prod_{i=1}^N p(u_i)$. For each codeword $u^N(i,j)$, encoder 1 generates $2^{NR_{1c}}$ independent codewords $u_1^N((i,j),k)$, $k \in \{1,\ldots,2^{NR_{1c}}\}$, according to $\prod_{i=1}^N p(u_{1i}|u_i)$. Subsequently, for each pair of codewords $(u^N(i,j), u_1^N((i,j),k))$, generate $2^{NR_{1p}}$ independent codewords $x_1^N((i,j),k,l)$, $l \in \{1,\ldots,2^{NR_{1p}}\}$, according to $\prod_{i=1}^N p(x_{1i}|u_{1i},u_i)$.

Similarly, for each codeword $u^N(i,j)$, encoder 2 generates $2^{NR_{2c}}$ independent codewords $u_2^N((i,j),r)$, $r \in \{1,\ldots,2^{NR_{2c}}\}$, according to $\prod_{i=1}^N p(u_{2i}|u_i)$. For $(u^N(i,j), u_2^N((i,j),r))$, generate $2^{NR_{2p}}$ independent codewords $x_2^N((i,j),r,s)$, $s \in \{1,\ldots,2^{NR_{2p}}\}$, according to $\prod_{i=1}^N p(x_{2i}|u_{2i},u_i)$.

Notation: Notations are independently used only for this section. The index k indicates the common message of user 1 instead of user index. The index i is used for both purposes: (1) indicating the previous common message of user 1; (2) indicating time index. It could be easily differentiated from contexts.

Encoding and Decoding: We employ block Markov encoding with a total size B of blocks. Focus on the bth block transmission. With feedback $y_1^{N,(b-1)}$, transmitter 1 tries to decode the message $\hat{w}_{2c}^{(b-1)} = \hat{k}$ (sent from transmitter 2 in the $(b-1)$th block). In other words, we find the unique $\hat{k}$ such that

$$\begin{aligned}&\left(u^N\left(w_{1c}^{(b-2)},\hat{w}_{2c}^{(b-2)}\right), u_1^N\left(\left(w_{1c}^{(b-2)},\hat{w}_{2c}^{(b-2)}\right), w_{1c}^{(b-1)}\right),\right.\\ &\quad x_1^N\left(\left(w_{1c}^{(b-2)},\hat{w}_{2c}^{(b-2)}\right), w_{1c}^{(b-1)}, w_{1p}^{(b-1)}\right),\\ &\quad \left. u_2^N\left(\left(w_{1c}^{(b-2)},\hat{w}_{2c}^{(b-2)}\right),\hat{k}\right), y_1^{N,(b-1)}\right) \in A_\epsilon^{(N)},\end{aligned}$$

where $A_\epsilon^{(N)}$ indicates the set of jointly typical sequences. Note that transmitter 1 already knows its own messages $(w_{1c}^{(b-2)}, w_{1c}^{(b-1)}, w_{1p}^{(b-1)})$. We assume that $\hat{w}_{2c}^{(b-2)}$ is correctly decoded from the previous block $(b-1)$. The decoding error occurs if one of two events happens: (1) there is no typical sequence; (2) there is another $\hat{w}_{2c}^{(b-1)}$ such that it is a typical sequence. By AEP, the first error probability becomes negligible as N goes to infinity. By [34], the second error probability becomes arbitrarily small (as N goes to infinity) if

$$R_{2c} \le I(U_2;Y_1|X_1,U). \tag{50}$$

Based on $(w_{1c}^{(b-1)}, \hat{w}_{2c}^{(b-1)})$, transmitter 1 generates a new common message $w_{1c}^{(b)}$ and a private message $w_{1p}^{(b)}$. It then sends $x_1^N((w_{1c}^{(b-1)}, \hat{w}_{2c}^{(b-1)}), w_{1c}^{(b)}, w_{1p}^{(b)})$. Similarly transmitter 2 decodes $\hat{w}_{1c}^{(b-1)}$, generates $(w_{2c}^{(b)}, w_{2p}^{(b)})$ and then sends $x_2^N((\hat{w}_{1c}^{(b-1)}, w_{2c}^{(b-1)}), w_{2c}^{(b)}, w_{2p}^{(b)})$.

Each receiver waits until total B blocks have been received and then does *backward decoding*. Notice that a block index b starts from the last B and ends to 1. For block b, receiver 1 finds the unique triple $(\hat{i},\hat{j},\hat{k})$ such that

$$\begin{aligned}&\left(u^N\left(\hat{i},\hat{j}\right), u_1^N\left((\hat{i},\hat{j}),\hat{w}_{1c}^{(b)}\right), x_1^N\left((\hat{i},\hat{j}),\hat{w}_{1c}^{(b)},\hat{k}\right),\right.\\ &\qquad \left. u_2^N\left((\hat{i},\hat{j}),\hat{w}_{2c}^{(b)}\right), y_1^{N,(b)}\right) \in A_\epsilon^{(N)}\end{aligned}$$

where we assumed that a pair of messages $(\hat{w}_{1c}^{(b)}, \hat{w}_{2c}^{(b)})$ was successively decoded from block $(b+1)$. Similarly receiver 2 decodes $(\hat{w}_{1c}^{(b-1)}, \hat{w}_{2c}^{(b-1)}, \hat{w}_{2p}^{(b)})$.

Error Probability: By symmetry, we consider the probability of error only for block b and for a pair of transmitter 1 and receiver 1. We assume that $(w_{1c}^{(b-1)}, w_{2c}^{(b-1)}, w_{1p}^{(b)}) = (1,1,1)$ was sent through block $(b-1)$ and block b; and there was no backward decoding error from block B to $(b+1)$, i.e., $(\hat{w}_{1c}^{(b)}, \hat{w}_{2c}^{(b)})$ are successfully decoded.

Define an event

$$\begin{aligned}E_{ijk} = \Big\{&\left(u^N(i,j), u_1^N\left((i,j),\hat{w}_{1c}^{(b)}\right), x_1^N\left((i,j),\hat{w}_{1c}^{(b)},k\right)\right.\\ &\left. u_2^N\left((i,j),\hat{w}_{2c}^{(b)}\right), y_1^{N,(b)}\right) \in A_\epsilon^{(N)}\Big\}.\end{aligned}$$

By AEP, the first type of error becomes negligible. Hence, we focus only on the second type of error. Using the union bound, we get

$$\begin{aligned}&\Pr\left(\bigcup_{(i,j,k)\neq(1,1,1)} E_{ijk}\right)\\ &\le \sum_{i\neq1,j\neq1,k\neq1}\Pr(E_{ijk})\\ &\quad+\sum_{i\neq1,j\neq1,k=1}\Pr(E_{ij1})+\sum_{i\neq1,j=1,k\neq1}\Pr(E_{i1k})\\ &\quad+\sum_{i\neq1,j=1,k=1}\Pr(E_{i11})+\sum_{i=1,j\neq1,k\neq1}\Pr(E_{1jk})\\ &\quad+\sum_{i=1,j\neq1,k=1}\Pr(E_{1j1})+\sum_{i=1,j=1,k\neq1}\Pr(E_{11k})\\ &\le 2^{N(R_{1c}+R_{2c}+R_{1p}-I(U,X_1,U_2;Y_1)+4\epsilon)}\\ &\quad+2^{N(R_{1c}+R_{2c}-I(U,X_1,U_2;Y_1)+4\epsilon)}\\ &\quad+2^{N(R_{1c}+R_{1p}-I(U,X_1,U_2;Y_1)+4\epsilon)}\\ &\quad+2^{N(R_{1c}-I(U,X_1,U_2;Y_1)+4\epsilon)}\\ &\quad+2^{N(R_{2c}+R_{1p}-I(U,X_1,U_2;Y_1)+4\epsilon)}\\ &\quad+2^{N(R_{2c}-I(U,X_1,U_2;Y_1)+4\epsilon)}\\ &\quad+2^{N(R_{1p}-I(X_1;Y_1|U,U_1,U_2)+4\epsilon)}.\end{aligned} \tag{51}$$

From (50) and (51), we can say that the error probability can be made arbitrarily small if

$$\begin{cases}R_{2c} & \le I(U_2;Y_1|X_1,U)\\ R_{1p} & \le I(X_1;Y_1|U_1,U_2,U)\\ R_{1c}+R_{1p}+R_{2c} & \le I(U,X_1,U_2;Y_1)\end{cases} \tag{52}$$

$$\begin{cases}R_{1c} & \le I(U_1;Y_2|X_2,U)\\ R_{2p} & \le I(X_2;Y_2|U_1,U_2,U)\\ R_{2c}+R_{2p}+R_{1c} & \le I(U,X_2,U_1;Y_2).\end{cases} \tag{53}$$

Fourier-Motzkin Elimination: Applying Fourier-Motzkin elimination, we easily obtain the desired inequalities. There are several steps to remove R_{1p}, R_{2p}, R_{1c}, and R_{2c}, successively. First substitute $R_{1p} = R_1 - R_{1c}$ and $R_{2p} = R_2 - R_{2c}$ to get

$$\begin{aligned}
R_{2c} &\le I(U_2;Y_1|X_1,U) &:= a_1 \quad (54)\\
R_1 - R_{1c} &\le I(X_1;Y_1|U_1,U_2,U) &:= a_2 \quad (55)\\
R_1 + R_{2c} &\le I(U,X_1,U_2;Y_1) &:= a_3 \quad (56)\\
R_{1c} &\le I(U_1;Y_2|X_2,U) &:= b_1 \quad (57)\\
R_2 - R_{2c} &\le I(X_2;Y_2|U_1,U_2,U) &:= b_2 \quad (58)\\
R_2 + R_{1c} &\le I(U,X_2,U_1;Y_2) &:= b_3 \quad (59)\\
-R_{1c} &\le 0 & (60)\\
-R_1 + R_{1c} &\le 0 & (61)\\
-R_{2c} &\le 0 & (62)\\
-R_2 + R_{2c} &\le 0 & (63)
\end{aligned}$$

Categorize the above inequalities into the following three groups: (1) group 1 not containing R_{1c}; (2) group 2 containing *negative* R_{1c}; (3) group 3 containing *positive* R_{1c}. By adding each inequality from groups 2 and 3, we remove R_{1c}. Rearranging the inequalities with respect to R_{2c}, we get

$$\begin{aligned}
R_1 &\le b_1 + a_2 & (64)\\
R_2 + R_1 &\le b_5 + a_2 & (65)\\
-R_1 &\le 0 & (66)\\
R_{2c} &\le a_1 & (67)\\
R_1 + R_{2c} &\le a_5 & (68)\\
-R_2 + R_{2c} &\le 0 & (69)\\
R_2 - R_{2c} &\le b_2 & (70)\\
-R_{2c} &\le 0. & (71)
\end{aligned}$$

Adding each inequality from groups 2 and 3, we remove R_{2c} and finally obtain

$$\begin{aligned}
R_1 &\le \min(a_5, b_1 + a_2) & (72)\\
R_2 &\le \min(b_5, a_1 + b_2) & (73)\\
R_1 + R_2 &\le \min(b_5 + a_2, a_5 + b_2). & (74)
\end{aligned}$$

Appendix C
Converse Proof of Theorem 5

For completeness, we provide the detailed proof, although there are many overlaps with the proof in Theorem 3. The main point of the converse is how to introduce an auxiliary random variable U which satisfies that given U_i, X_{1i} is conditionally independent of X_{2i}. Claim 4 gives hint into this. It gives the choice of $U_i := (V_1^{i-1}, V_2^{i-1})$.

First we consider the upper bound of an individual rate.

$$\begin{aligned}
NR_1 = H(W_1) &\overset{(a)}{\le} I\left(W_1;Y_1^N\right) + N\epsilon_N\\
&\overset{(b)}{\le} \sum H(Y_{1i}) + N\epsilon_N
\end{aligned}$$

where (a) follows from Fano's inequality and (b) follows from the fact that entropy is nonnegative and conditioning reduces entropy.

Now consider the second bound.

$$\begin{aligned}
NR_1 &= H(W_1) = H(W_1|W_2)\\
&\le I\left(W_1;Y_1^N \,|\, W_2\right) + N\epsilon_N\\
&\le I\left(W_1;Y_1^N, Y_2^N|W_2\right) + N\epsilon_N\\
&\overset{(a)}{=} \sum H(Y_{1i},Y_{2i}|W_2,Y_1^{i-1},Y_2^{i-1}) + N\epsilon_N\\
&\overset{(b)}{=} \sum H\left(Y_{1i},Y_{2i} \,|\, W_2,Y_1^{i-1},Y_2^{i-1},X_2^i\right) + N\epsilon_N\\
&\overset{(c)}{=} \sum H\left(Y_{2i} \,|\, W_2,Y_1^{i-1},Y_2^{i-1},X_2^i\right)\\
&\quad + \sum H\left(Y_{1i} \,|\, W_2,Y_1^{i-1},Y_2^{i-1},X_2^i,Y_{2i},V_1^i\right) + N\epsilon_N\\
&\overset{(d)}{\le} \sum [H(Y_{2i} \,|\, X_{2i},U_i) + H(Y_{1i} \,|\, V_{1i},V_{2i},U_i)] + N\epsilon_N
\end{aligned}$$

where (a) follows from the fact that (Y_1^N, Y_2^N) is a function of (W_1, W_2); (b) follows from the fact that X_2^i is a function of (W_2, Y_2^{i-1}); (c) follows from the fact that V_1^i is a function of (Y_2^i, X_2^i); (d) follows from the fact that V_1^{i-1} is a function of (Y_2^{i-1}, X_2^{i-1}), $V_2^{i-1}$is a function of X_2^{i-1}, and conditioning reduces entropy. Similarly we get the outer bound for R_2.

The sum rate bound is given as follows:

$$\begin{aligned}
&N(R_1 + R_2)\\
&\quad = H(W_1) + H(W_2) = H(W_1|W_2) + H(W_2)\\
&\quad \le I\left(W_1;Y_1^N \,|\, W_2\right) + I\left(W_2;Y_2^N\right) + N\epsilon_N\\
&\quad = H\left(Y_1^N \,|\, W_2\right) + I\left(W_2;Y_2^N\right) + N\epsilon_N\\
&\quad = H\left(Y_1^N \,|\, W_2\right) + H\left(Y_2^N\right)\\
&\qquad - \left\{H\left(Y_1^N,Y_2^N|W_2\right) - H\left(Y_1^N|Y_2^N,W_2\right)\right\} + N\epsilon_N\\
&\quad = H\left(Y_1^N \,|\, Y_2^N,W_2\right) - H\left(Y_2^N \,|\, Y_1^N,W_2\right)\\
&\qquad + H\left(Y_2^N\right) + N\epsilon_N\\
&\quad \overset{(a)}{=} \sum H\left(Y_{1i} \,|\, Y_1^{i-1},Y_2^N,W_2,X_2^i,V_1^i\right)\\
&\qquad + H\left(Y_2^N\right) + N\epsilon_N\\
&\quad \overset{(b)}{\le} \sum [H(Y_{1i}|V_{1i},V_{2i},U_i) + H(Y_{2i})] + N\epsilon_N
\end{aligned}$$

where (a) follows from the fact that X_2^i is a function of (W_2, Y_2^{i-1}) and V_1^i is a function of (X_2^i, Y_2^i); (b) follows from the fact that V_2^i is a function of X_2^i and conditioning reduces entropy. Similarly, we get the other outer bound

$$N(R_1 + R_2) \le \sum [H(Y_{2i}|V_{1i},V_{2i},U_i) + H(Y_{1i})] + N\epsilon_N.$$

Now let a time index Q be a random variable uniformly distributed over the set $\{1, 2, \ldots, N\}$ and independent of $(W_1, W_2, X_1^N, X_2^N, Y_1^N, Y_2^N)$. We define

$$\begin{aligned}
&X_1 = X_{1Q},\ V_1 = V_{1Q};\ X_2 = X_{2Q},\ V_2 = V_{1Q},\\
&Y_1 = Y_{1Q},\ Y_2 = Y_{2Q};\ U = (U_Q, Q). \qquad (75)
\end{aligned}$$

If (R_1, R_2) is achievable, then $\epsilon_N \to 0$ as $N \to \infty$. By Claim 4, an input joint distribution satisfies $p(u, x_1, x_2) = p(u)p(x_1 \,|\, u)p(x_2 \,|\, u)$. This establishes the converse.

Claim 4: Given $U_i = (V_1^{i-1}, V_2^{i-1})$, X_{1i} and X_{2i} are conditionally independent.

Proof: The proof is based on the dependence-balance-bound technique in [35], [36]. For completeness we describe details. First we show that $I(W_1; W_2|U_i) = 0$, which implies that W_1 and W_2 are independent given U_i. Based on this, we show that X_{1i} and X_{2i} are conditionally independent given U_i.

Consider

$$\begin{aligned}
0 &\le I(W_1; W_2 \,|\, U_i) \overset{(a)}{=} I(W_1; W_2 \,|\, U_i) - I(W_1; W_2) \\
&\overset{(b)}{=} -H(W_1) - H(W_2) - H(U_i) + H(W_1, W_2) \\
&\quad + H(W_1, U_i) + H(W_2, U_i) - H(W_1, W_2, U_i) \\
&\overset{(c)}{=} -H(U_i) + H(U_i|W_1) + H(U_i|W_2) \\
&= \sum_{j=1}^{i-1} \Big[-H\left(V_{1j}, V_{2j} \,|\, V_1^{j-1}, V_2^{j-1}\right) \\
&\quad + H\left(V_{1j}, V_{2j}|W_1, V_1^{j-1}, V_2^{j-1}\right) \\
&\quad + H\left(V_{1j}, V_{2j}|W_2, V_1^{j-1}, V_2^{j-1}\right)\Big] \\
&\overset{(d)}{=} \sum_{j=1}^{i-1} \Big[-H\left(V_{1j}, V_{2j}|V_1^{j-1}, V_2^{j-1}\right) \\
&\quad + H\left(V_{2j}|W_1, V_1^{j}, V_2^{j-1}\right) + H\left(V_{1j}|W_2, V_1^{j-1}, V_2^{j}\right)\Big] \\
&= \sum_{j=1}^{i-1} \Big[-H\left(V_{1j} \,|\, V_1^{j-1}, V_2^{j-1}\right) + H\left(V_{1j} \,|\, W_2, V_1^{j-1}, V_2^{j}\right) \\
&\qquad - H\left(V_{2j} \,|\, V_1^{j}, V_2^{j-1}\right) + H\left(V_{2j} \,|\, W_1, V_1^{j}, V_2^{j-1}\right)\Big] \\
&\overset{(e)}{\le} 0
\end{aligned}$$

where (a) follows from $I(W_1; W_2) = 0$; (b) follows from the chain rule; (c) follows from the chain rule and $H(U_i|W_1, W_2) = 0$; (d) follows from the fact that V_1^j is a function of (W_1, V_2^{j-1}) and V_2^j is a function of (W_2, V_1^{j-1}) (see Claim 5); (e) follows from the fact that conditioning reduces entropy. Therefore, $I(W_1; W_2|U_i) = 0$, which shows the independence of W_1 and W_2 given U_i.

Notice that X_{1i} is a function of (W_1, V_2^{i-1}) and X_{2i} is a function of (W_2, V_1^{i-1}) (see Claim 5). Hence, it follows easily that

$$I(X_{1i}; X_{2i} \,|\, U_i) = I\left(X_{1i}; X_{2i} \,|\, V_1^{i-1}, V_2^{i-1}\right) = 0 \qquad (76)$$

which proves the independence of X_{1i} and X_{2i} given U_i. ■

Claim 5: For $i \ge 1$, X_1^i is a function of (W_1, V_2^{i-1}). Similarly, X_2^i is a function of (W_2, V_1^{i-1}).

Proof: By symmetry, it is enough to prove it only for X_1^i. Since the channel is deterministic (noiseless), X_1^i is a function of (W_1, W_2). In Fig. 10, we see that information of W_2 to the first link pair must pass through V_{2i}. Also note that X_{1i} depends on the past output sequences until $i-1$ (due to feedback delay). Therefore, X_1^i is a function of (W_1, V_2^{i-1}). ■

Appendix D
Proof of Lemma 2

Let $\mathsf{INR} = \mathsf{SNR}^\alpha$. Then, by [16, eq. (29)] and [17, eq. (77*)], we get

$$R_{\mathsf{sym}} = \log\left(\frac{1 + \mathsf{SNR} + \mathsf{SNR}^\alpha + 2\rho^* \mathsf{SNR}^{\frac{\alpha+1}{2}}}{1 + (1-\rho^{*2})\mathsf{SNR}^\alpha}\right) \qquad (77)$$

where ρ^* is the solution between 0 and 1 such that

$$\begin{aligned}
&2\mathsf{SNR}^{\frac{3\alpha+1}{2}}\rho^{*4} + \mathsf{SNR}^\alpha \rho^{*3} - 4\left(\mathsf{SNR}^{\frac{3\alpha+1}{2}} + \mathsf{SNR}^{\frac{\alpha+1}{2}}\right)\rho^{*2} \\
&\quad -(2 + \mathsf{SNR} + 2\mathsf{SNR}^\alpha)\rho^* + 2\left(\mathsf{SNR}^{\frac{3\alpha+1}{2}} + \mathsf{SNR}^{\frac{\alpha+1}{2}}\right) = 0.
\end{aligned}$$

Notice that for $0 \le \alpha \le \frac{1}{3}$ and for the high SNR regime, SNR is a dominant term and $0 < \rho^* < 1$. Hence, we get $\rho^* \approx 2\mathsf{SNR}^{\frac{3\alpha-1}{2}}$. This gives $\lim_{\mathsf{SNR}\to\infty} \frac{R_{\mathsf{sym}}}{\log(\mathsf{SNR})} = 1 - \alpha$. For $\frac{1}{3} < \alpha < 1$, the first and second dominant terms become $\mathsf{SNR}^{\frac{3\alpha+1}{2}}$ and SNR, respectively. Also for this regime, $\rho^* \approx 1$. Hence, we approximately get $1 - \rho^{*2} \approx \mathsf{SNR}^{\frac{-3\alpha+1}{4}}$. This gives $\lim_{\mathsf{SNR}\to\infty} \frac{R_{\mathsf{sym}}}{\log(\mathsf{SNR})} = \frac{3-\alpha}{4}$. For $\alpha \ge 1$, note that the first and second dominant terms are $\mathsf{SNR}^{\frac{3\alpha+1}{2}}$ and SNR; and ρ^* is very close to 1. So we get $1 - \rho^{*2} \approx \mathsf{SNR}^{-\frac{\alpha+1}{4}}$. This gives the desired result in the last case.

References

[1] C. E. Shannon, "The zero error capacity of a noisy channel," *IRE Trans. Inf. Theory*, Sep. 1956.

[2] T. M. Cover and S. Pombra, "Gaussian feedback capacity," *IEEE Trans. Inf. Theory*, vol. 35, pp. 37–43, Jan. 1989.

[3] Y.-H. Kim, "Feedback capacity of the first-order moving average Gaussian channel," *IEEE Trans. Inf. Theory*, vol. 52, pp. 3063–3079, July 2006.

[4] S. Butman, "A general formulation of linear feedback communication systems with solutions," *IEEE Trans. Inf. Theory*, vol. 15, pp. 392–400, May 1969.

[5] N. T. Gaarder and J. K. Wolf, "The capacity region of a multiple-access discrete memoryless channel can increase with feedback," *IEEE Trans. Inf. Theory*, Jan. 1975.

[6] L. H. Ozarow, "The capacity of the white Gaussian multiple access channel with feedback," *IEEE Trans. Inf. Theory*, Jul. 1984.

[7] A. S. Avestimehr, S. Diggavi, and D. N. C. Tse, "A deterministic approach to wireless relay networks," in *Proc. Allerton Conf. Commun., Contr., Comput.*, Sep. 2007.

[8] S. M. Alamouti, "A simple transmit diversity technique for wireless communication," *IEEE J. Sel. Areas in Commun.*, vol. 16, pp. 1451–1458, Oct. 1998.

[9] R. Etkin, D. N. C. Tse, and H. Wang, "Gaussian interference channel capacity to within one bit," *IEEE Trans. Inf. Theory*, vol. 54, pp. 5534–5562, Dec. 2008.

[10] T. M. Cover and A. A. El-Gamal, "Capacity theorems for the relay channel," *IEEE Trans. Inf. Theory*, vol. 25, pp. 572–584, Sep. 1979.

[11] T. M. Cover and C. S. K. Leung, "An achievable rate region for the multiple-access channel with feedback," *IEEE Trans. Inf. Theory*, vol. 27, pp. 292–298, May 1981.

[12] F. M. J. Willems and E. C. van der Meulen, "The discrete memoryless multiple-access channel with cribbing encoders," *IEEE Trans. Inf. Theory*, vol. 31, pp. 313–327, May 1985.

[13] T. S. Han and K. Kobayashi, "A new achievable rate region for the interference channel," *IEEE Trans. Inf. Theory*, vol. 27, pp. 49–60, Jan. 1981.

[14] A. El-Gamal and M. H. Costa, "The capacity region of a class of deterministic interference channels," *IEEE Trans. Inf. Theory*, vol. 28, pp. 343–346, Mar. 1982.

[15] E. Telatar and D. N. C. Tse, "Bounds on the capacity region of a class of interference channels," in *Proc. IEEE Int. Symp. Inf. Theory*, Jun. 2007.
[16] G. Kramer, "Feedback strategies for white Gaussian interference networks," *IEEE Trans. Inf. Theory*, vol. 48, pp. 1423–1438, Jun. 2002.
[17] G. Kramer, "Correction to "feedback strategies for white Gaussian interference networks", and a capacity theorem for Gaussian interference channels with feedback," *IEEE Trans. Inf. Theory*, vol. 50, Jun. 2004.
[18] M. Gastpar and G. Kramer, "On noisy feedback for interference channels," in *Proc. Asilomar Conf. Signals, Syst., Comput.*, Oct. 2006.
[19] R. Tandon and S. Ulukus, "Dependence balance based outer bounds for Gaussian networks with cooperation and feedback," *IEEE Trans. Inf. Theory*, to be published.
[20] J. Jiang, Y. Xin, and H. K. Garg, "Discrete memoryless interference channels with feedback," in *Proc. CISS 41st Ann. Conf.* , Mar. 2007, pp. 581–584.
[21] V. Prabhakaran and P. Viswanath, "Interference channels with source cooperation," *IEEE Trans. Inf. Theory*, vol. 57, no. 1, pp. 156–186, Jan. 2011.
[22] G. Bresler and D. N. C. Tse, "The two-user Gaussian interference channel: A deterministic view," *Eur. Trans. Telecommun.*, Jun. 2008.
[23] C. E. Shannon, "Coding theorems for a discrete source with a fidelity criterion," *IRE Nat. Conv. Rec.*, 1959.
[24] J. N. Laneman and G. W. Wornell, "Distributed space-time-coded protocols for exploiting cooperative diversity in wireless networks," *IEEE Trans. Inf. Theory*, vol. 49, pp. 2415–2425, Oct. 2003.
[25] C. Suh and D. N. C. Tse, "Feedback capacity of the Gaussian interference channel to within 1.7075 bits: The symmetric case," [Online]. Available: arXiv:0901.3580v1 Jan. 2009
[26] D. Tuninetti, "On interference channel with generalized feedback (IFC-GF)," in *Proc. IEEE Int. Symp. Inf. Theory*, Jun. 2007.
[27] R. Ahlswede, N. Cai, S.-Y. R. Li, and R. W. Yeung, "Network information flow," *IEEE Trans. Inf. Theory*, vol. 46, pp. 1204–1216, Jul. 2000.
[28] Y. Wu, P. A. Chou, and S. Y. Kung, "Information exchange in wireless networks with network coding and physical-layer broadcast," in *Proc. CISS 39th Ann. Conf.*, Mar. 2005.
[29] S. Katti, H. Rahul, W. Hu, D. Katabi, M. Medard, and J. Crowcroft, "XORs in the air: Practical wireless network coding," *ACM SIGCOMM Comput. Commun. Rev.*, vol. 36, pp. 243–254, Oct. 2006.
[30] Z. Bar-Yossef, Y. Birk, T. S. Jayram, and T. Kol, "Index coding with side information," *Found. Comput. Sci. (FOCS)*, pp. 197–206, Oct. 2006.
[31] L. Georgiadis and L. Tassiulas, "Broadcast erasure channel with feedback—Capacity and algorithms," in *Proc. 2009 Workshop on Netw. Coding, Theory Appl. (NetCod)*, Jun. 2009.
[32] M. Maddah-Ali and D. N. C. Tse, "Completely stale transmitter channel state information is still very useful," in *Proc. Allerton Conf. Commun., Contr., Comput.*, Sep. 2010.
[33] J. P. M. Schalkwijk and T. Kailath, "A coding scheme for additive noise channels with feedback—Part I: No bandwidth constraint," *IEEE Trans. Inf. Theory*, Apr. 1966.
[34] T. M. Cover and J. A. Thomas, *Elements of Information Theory*, 2th ed. New York: Wiley, Jul. 2006.
[35] F. M. J. Willems, "The feedback capacity region of a class of discrete memoryless multiple access channels," *IEEE Trans. Inf. Theory*, vol. 28, pp. 93–95, Jan. 1982.
[36] A. P. Hekstra and F. M. J. Willems, "Dependence balance bounds for single-output two-way channels," *IEEE Trans. Inf. Theory*, vol. 35, pp. 44–53, Jan. 1989.
[37] A. S. Avestimehr, S. Diggavi, and D. N. C. Tse, "Wireless network information flow: A deterministic approach," *IEEE Trans. Inf. Theory,*, vol. 57, no. 4, pp. 1872–1905, Apr. 2011.

Changho Suh (S'10) received the B.S. and M.S. degrees in electrical engineering from the Korea Advanced Institute of Science and Technology, Daejeon, in 2000 and 2002, respectively.

Since 2006, he has been with the Department of Electrical Engineering and Computer Science, University of California at Berkeley. Prior to that, he had been with the Communications Department, Samsung Electronics. His research interests include information theory and wireless communications.

Dr. Suh is a recipient of the Best Student Paper Award of the IEEE International Symposium on Information Theory 2009 and the Outstanding Graduate Student Instructor Award in 2010. He was awarded several fellowships: the Vodafone U.S. Foundation Fellowship in 2006 and 2007; Kwanjeong Educational Foundation Fellowship in 2009; and Korea Government Fellowship from 1996 to 2002.

David N. C. Tse (M'96–SM'97–F'09) received the B.A.Sc. degree in systems design engineering from the University of Waterloo, Waterloo, ON, Canada, in 1989, and the M.S. and Ph.D. degrees in electrical engineering from the Massachusetts Institute of Technology, Cambridge, in 1991 and 1994, respectively.

From 1994 to 1995, he was a postdoctoral member of technical staff at AT&T Bell Laboratories. Since 1995, he has been with the Department of Electrical Engineering and Computer Sciences, University of California at Berkeley, where he is currently a Professor. He is a coauthor, with P. Viswanath, of the text *Fundamentals of Wireless Communication* (Cambridge University Press, 2005), which has been used in over 60 institutions around the world.

Dr. Tse received a 1967 NSERC 4-year graduate fellowship from the government of Canada in 1989, a NSF CAREER award in 1998, the Best Paper Awards at the Infocom 1998 and Infocom 2001 conferences, the Erlang Prize in 2000 from the INFORMS Applied Probability Society, the IEEE Communications and Information Theory Society Joint Paper Award in 2001, the Information Theory Society Paper Award in 2003, and the 2009 Frederick Emmons Terman Award from the American Society for Engineering Education. He has given plenary talks at international conferences such as ICASSP in 2006, MobiCom in 2007, CISS in 2008, and ISIT in 2009. He was the Technical Program co-chair of the International Symposium on Information Theory in 2004 and was an Associate Editor of the TRANSACTIONS ON INFORMATION THEORY from 2001 to 2003.